Engine Actuators Service Info

www.vdo.com

Luftregelventil A2C59514306 und Nachfolgeprodukte

Sehr geehrte Damen und Herren,

mit dieser Service Info möchten wir Ihnen eine Information zu dem Auslauf von dem Luftregelventil A2C59514306 geben.
Weiterhin nennen wir die entsprechenden Nachfolger (siehe folgende Abbildung).

Air Control Valve A2C59514306 and successor products

Dear Sir or Madam,

We herewith would like to inform you about the phase out of the Air Control Valve A2C59514306.
Furthermore we mention the corresponding successors (see following picture).

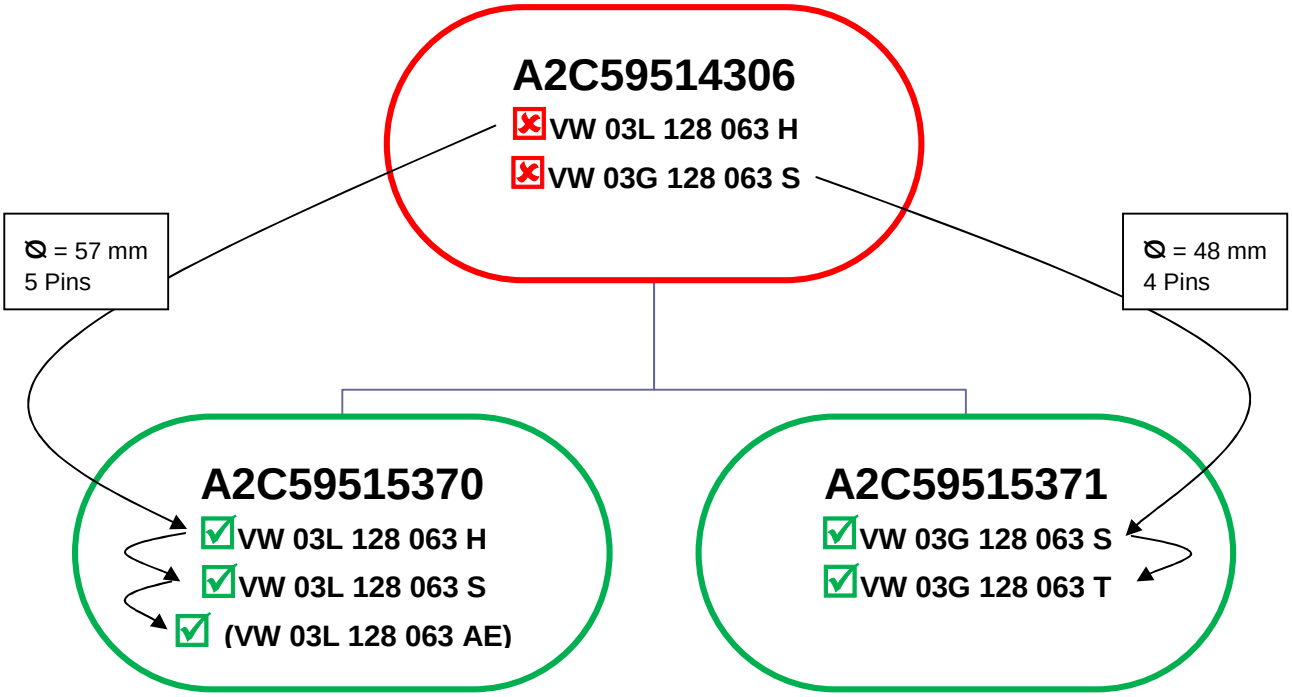

Wie aus der Abbildung hervorgeht, wurden die OEM Nummern von A2C59514306 falsch ersetzt. Infolgedessen wurden auch falsche Applikationen genannt. Eine Verwechslung der Produkte ist wegen der unterschiedlichen Durchmesser und Stecker ausgeschlossen.

Um Folgefehler auszuschließen, wurde A2C59514306 ausgesteuert und zwei neue Artikel mit den richtigen Informationen angelegt.

Diese beiden Artikel sind ab sofort am Lager verfügbar.

Detailinformationen folgen auf den nächsten Seiten.

As shown in the picture, the OEM No.'s of A2C59514306 were replaced in a wrong way. As a result wrong Applications were communicated. A mix-up is excluded as the products have different diameters and pins.

In order to avoid subsequent faults we have phased out A2C59514306 and we have set up two new articles with the correct information.

Both articles are available at our stock from now on.

Detail information follow on the next pages.

Continental Aftermarket GmbH I CV & AM IAM APPM 19.03.2013
Helfmann-Park 1
D - 65760 Eschborn, Germany
E-mail Michael.Rieth@continental-corporation.com
Tel.: +49 (0) 69 7603-8017
Fax: +49 (0) 69 7603-88-8017

Inland / Domestic: x RSO
Ausland / Abroad: x RSO / RD
Internet http://www.vdo.com

VDO – eine Marke des Continental-Konzerns / VDO – A trademark of the Continental Corporation

Bezeichnung/Name:

Luftregelventil / Air Control Valve

VDO Nr./No.:

A2C59515370

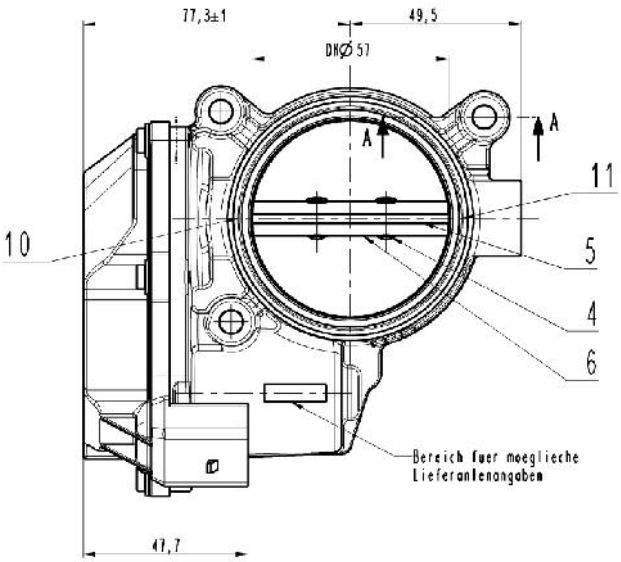

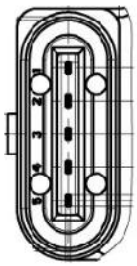

1	Sensor +
2	Sensor
3	Sensor -
4	Motor -
5	Motor +

EAN Nr./No.:
4103590660145

Vergleich Nr./ Comparable No.:
VDO A2C53385161
VDO A2C32356700
(VDO A2C83076500, neu / new in 2013)

OEM Nr./No.:
VW 03L 128 063 H
VW 03L 128 063 S
(VW 03L 128 063 AE, neu / new in 2013)

Applikationen (Details siehe Anhang) /
Applications (Details see Addendum):
VW Amaroc, Crafter, Multivan, Transporter

Logistsche Daten / Logistic data:
170x170x110 mm
0,825 kg
Made in Germany

Weitere Informationen / Further information:
Siehe Datenblatt.

Bezeichnung/Name:

Luftregelventil / Air Control Valve

VDO Nr./No.:

A2C59515371

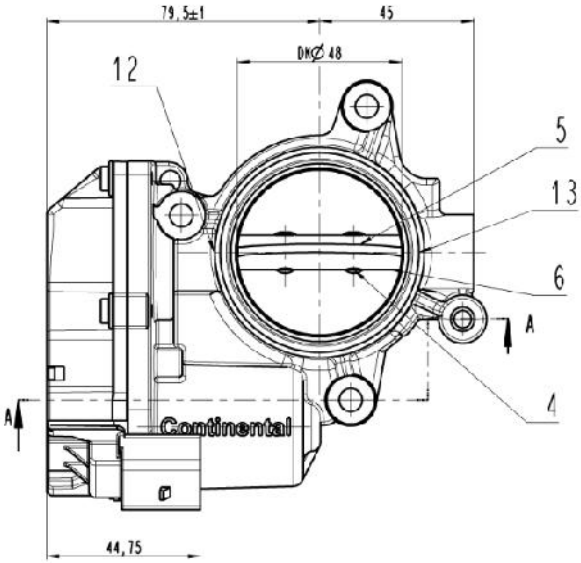

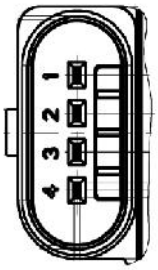

1	GND
2	U=12V
3	PWM_IN
4	STATUS

EAN Nr./No.:
4103590660152

Vergleich Nr./ Comparable No.:
VDO A2C32133000
VDO A2C37524500

OEM Nr./No.:
VW 03G 128 063 S
VW 03G 128 063 T

Applikationen (Details siehe Anhang) /
Applications (Details see Addendum):
VW Beetle, Golf VI, Jetta IV
Audi A3 (+) USA

Logistsche Daten / Logistic data:
170x170x110 mm
0,770 kg
Made in Germany

Weitere Informationen / Further information:
See Data sheet.

Sollten Sie noch Lagerbestand von dem alten Produkt A2C59514306 haben, so können Sie diesen als A2C59515371 verkaufen.

In case of remaining old stock goods A2C59514306, you may sell them as A2C59515371.

Verursachte Unannehmlichkeiten bitten wir zu entschuldigen.

We apologize for the trouble caused.

Für weitere Fragen stehen wir gerne zur Verfügung.

In case of further questions we are at your disposal.

Mit freundlichen Grüßen,

Best regards,

Michael Rieth

Produktmanager
I CV & AM IAM APPM

Continental
Division Interior
Business Unit Commercial Vehicles & Aftermarket

Michael Rieth

Productmanager
I CV & AM IAM APPM

Continental
Division Interior
Business Unit Commercial Vehicles & Aftermarket

Anhang

Addendum

Datenblatt / Data sheet

www.vdo.com

Luftregelventil / Air Control Valve

19.03.2013

A2C59515370

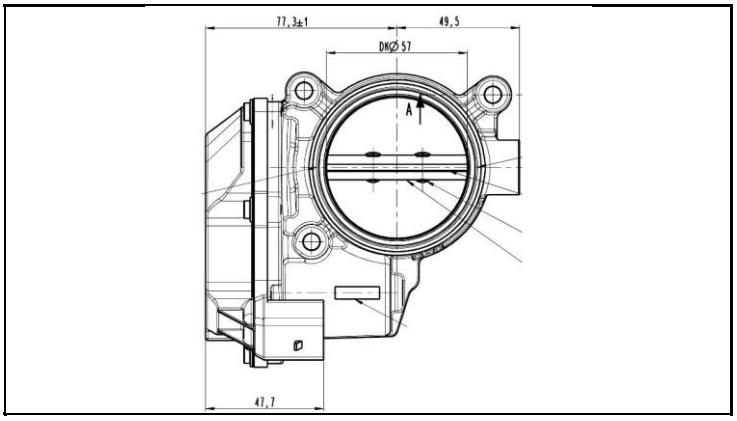

1 - Produkt / Product

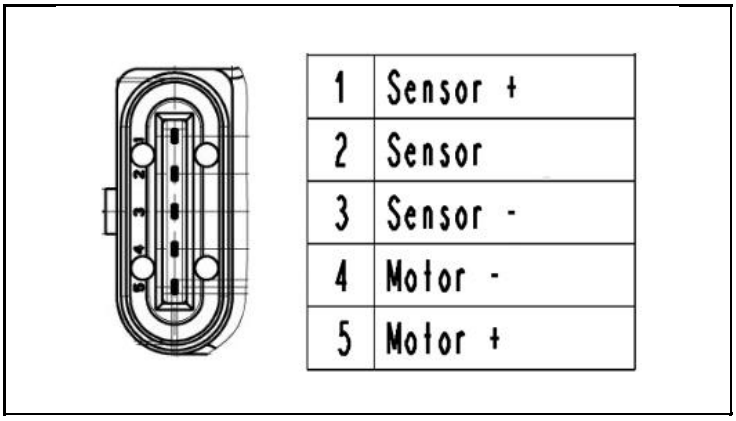

2 - Anschluss / Connector

TECHNISCHE DATEN / TECHNICAL DATA:

Durchmesser / Diameter = 57 mm

Dichtung / Gasket: integriert / integrated

ELEKTRISCHE DATEN / ELECTRICAL DATA:

Nennspannung (Motor) /
Nominal Voltage (Motor) = 12 V

Nennspannung (Positionssensor) /
Nominal Voltage (Position Sensor) = 5 V

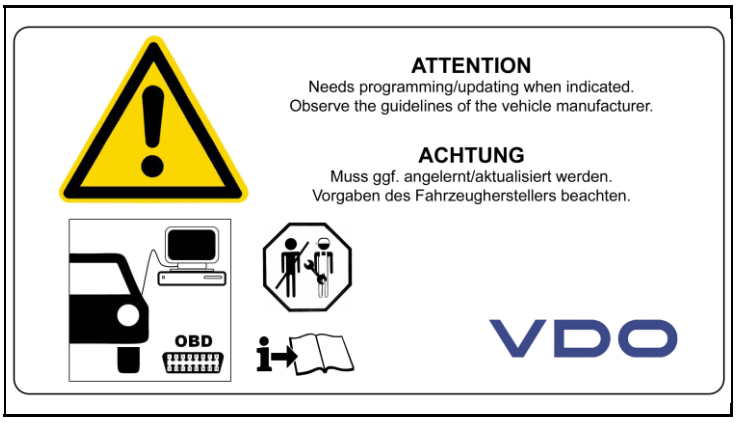

3 - Montage Hinweise / Installation Notes

4 - ESD Hinweise / ESD Notes

Datenblatt / Data sheet

www.vdo.com

Luftregelventil / Air Control Valve

19.03.2013

A2C59515371

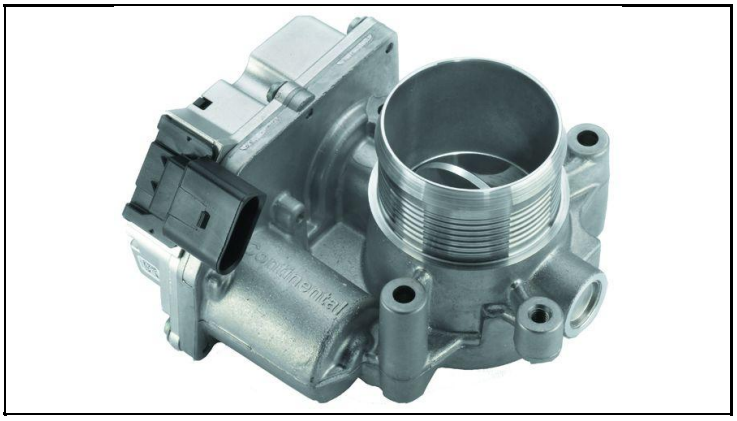

1 - Produkt / Product

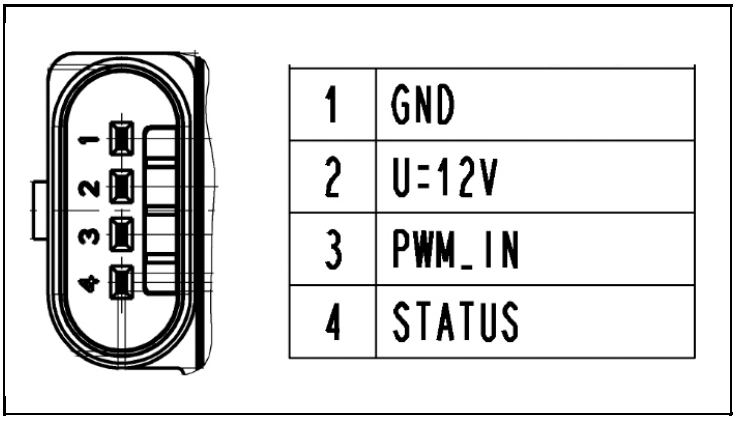

2 - Anschluss / Connector

TECHNISCHE DATEN / TECHNICAL DATA:

Durchmesser / Diameter = 48 mm

Dichtung / Gasket: integriert / integrated

ELEKTRISCHE DATEN / ELECTRICAL DATA:

Nennspannung / Nominal Voltage = 12 V

Mit Steuerelektronik / With Control Electronics

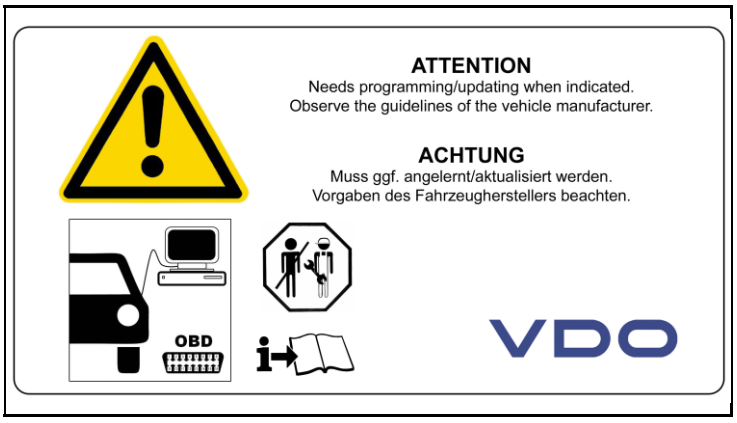

3 - Montage Hinweise / Installation Notes

4 - ESD Hinweise / ESD Notes

Anhang Applikationen / Addendum Applications

VDO Nr.	Bezeichnung	TecDoc - KtypNr.	Hersteller	Model	Typ	Von Jahr	Bis Jahr	kw	ps	L	Zyl.	Motorcode	Einschränkung1	Einschränkung1 - Wert
VDO No.	Name	TecDoc - Ktypeno.	Manufacturer	Model	Type	Year from	Year to	kw	ps	L	Cyl.	Motorcode	Restriction1	Restriction1 - Value
A2C59515370	Luftregelventil / Air Control Valve	33470	VOLKSWAGEN	AMAROK	2.0 BiTDI	09.2010		120	163	1968	4	CDCA		
A2C59515370	Luftregelventil / Air Control Valve	33470	VOLKSWAGEN	AMAROK	2.0 BiTDI	09.2010		120	163	1968	4	CDCA		
A2C59515370	Luftregelventil / Air Control Valve	33470	VOLKSWAGEN	AMAROK	2.0 BiTDI	09.2010		120	163	1968	4	CDCA		
A2C59515370	Luftregelventil / Air Control Valve	33470	VOLKSWAGEN	AMAROK	2.0 BiTDI	09.2010		120	163	1968	4	CDCA		
A2C59515370	Luftregelventil / Air Control Valve	33470	VOLKSWAGEN	AMAROK	2.0 BiTDI	09.2010		120	163	1968	4	CDCA		
A2C59515370	Luftregelventil / Air Control Valve	33470	VOLKSWAGEN	AMAROK	2.0 BiTDI	09.2010		120	163	1968	4	CDCA		
A2C59515370	Luftregelventil / Air Control Valve	33472	VOLKSWAGEN	AMAROK	2.0 BiTDI 4motion	09.2010		120	163	1968	4	CDCA		
A2C59515370	Luftregelventil / Air Control Valve	33472	VOLKSWAGEN	AMAROK	2.0 BiTDI 4motion	09.2010		120	163	1968	4	CDCA		
A2C59515370	Luftregelventil / Air Control Valve	33472	VOLKSWAGEN	AMAROK	2.0 BiTDI 4motion	09.2010		120	163	1968	4	CDCA		
A2C59515370	Luftregelventil / Air Control Valve	33472	VOLKSWAGEN	AMAROK	2.0 BiTDI 4motion	09.2010		120	163	1968	4	CDCA		
A2C59515370	Luftregelventil / Air Control Valve	33472	VOLKSWAGEN	AMAROK	2.0 BiTDI 4motion	09.2010		120	163	1968	4	CDCA		
A2C59515370	Luftregelventil / Air Control Valve	33472	VOLKSWAGEN	AMAROK	2.0 BiTDI 4motion	09.2010		120	163	1968	4	CDCA		
A2C59515370	Luftregelventil / Air Control Valve	34980	VOLKSWAGEN	AMAROK	2.0 TDI	09.2010		90	122	1968	4	CDBA		
A2C59515370	Luftregelventil / Air Control Valve	34980	VOLKSWAGEN	AMAROK	2.0 TDI	09.2010		90	122	1968	4	CDBA		
A2C59515370	Luftregelventil / Air Control Valve	34980	VOLKSWAGEN	AMAROK	2.0 TDI	09.2010		90	122	1968	4	CDBA		
A2C59515370	Luftregelventil / Air Control Valve	34980	VOLKSWAGEN	AMAROK	2.0 TDI	09.2010		90	122	1968	4	CDBA		
A2C59515370	Luftregelventil / Air Control Valve	34980	VOLKSWAGEN	AMAROK	2.0 TDI	09.2010		90	122	1968	4	CDBA		
A2C59515370	Luftregelventil / Air Control Valve	34980	VOLKSWAGEN	AMAROK	2.0 TDI	09.2010		90	122	1968	4	CDBA		
A2C59515370	Luftregelventil / Air Control Valve	56028	VOLKSWAGEN	AMAROK	2.0 TDI	11.2011		132	180	1968	4	CNEA		
A2C59515370	Luftregelventil / Air Control Valve	22936	VOLKSWAGEN	AMAROK	2.0 TDI 4motion	11.2011		132	180	1968	4	CNEA		
A2C59515370	Luftregelventil / Air Control Valve	22936	VOLKSWAGEN	AMAROK	2.0 TDI 4motion	11.2011		132	180	1968	4	CSHA		
A2C59515370	Luftregelventil / Air Control Valve	22936	VOLKSWAGEN	AMAROK	2.0 TDI 4motion	11.2011		132	180	1968	4	CNEA		
A2C59515370	Luftregelventil / Air Control Valve	22936	VOLKSWAGEN	AMAROK	2.0 TDI 4motion	11.2011		132	180	1968	4	CNEA		
A2C59515370	Luftregelventil / Air Control Valve	22936	VOLKSWAGEN	AMAROK	2.0 TDI 4motion	11.2011		132	180	1968	4	CSHA		
A2C59515370	Luftregelventil / Air Control Valve	22936	VOLKSWAGEN	AMAROK	2.0 TDI 4motion	11.2011		132	180	1968	4	CNEA		
A2C59515370	Luftregelventil / Air Control Valve	22936	VOLKSWAGEN	AMAROK	2.0 TDI 4motion	11.2011		132	180	1968	4	CSHA		
A2C59515370	Luftregelventil / Air Control Valve	22936	VOLKSWAGEN	AMAROK	2.0 TDI 4motion	11.2011		132	180	1968	4	CNEA		
A2C59515370	Luftregelventil / Air Control Valve	22936	VOLKSWAGEN	AMAROK	2.0 TDI 4motion	11.2011		132	180	1968	4	CSHA		
A2C59515370	Luftregelventil / Air Control Valve	22936	VOLKSWAGEN	AMAROK	2.0 TDI 4motion	11.2011		132	180	1968	4	CNEA		
A2C59515370	Luftregelventil / Air Control Valve	22936	VOLKSWAGEN	AMAROK	2.0 TDI 4motion	11.2011		132	180	1968	4	CSHA		
A2C59515370	Luftregelventil / Air Control Valve	22936	VOLKSWAGEN	AMAROK	2.0 TDI 4motion	11.2011		132	180	1968	4	CSHA		
A2C59515370	Luftregelventil / Air Control Valve	22936	VOLKSWAGEN	AMAROK	2.0 TDI 4motion	11.2011		132	180	1968	4	CSHA		
A2C59515370	Luftregelventil / Air Control Valve	22936	VOLKSWAGEN	AMAROK	2.0 TDI 4motion	11.2011		132	180	1968	4	CNEA		
A2C59515370	Luftregelventil / Air Control Valve	34979	VOLKSWAGEN	AMAROK	2.0 TDI 4motion	09.2010		90	122	1968	4	CDBA		
A2C59515370	Luftregelventil / Air Control Valve	34979	VOLKSWAGEN	AMAROK	2.0 TDI 4motion	09.2010		90	122	1968	4	CDBA		
A2C59515370	Luftregelventil / Air Control Valve	34979	VOLKSWAGEN	AMAROK	2.0 TDI 4motion	09.2010		90	122	1968	4	CDBA		
A2C59515370	Luftregelventil / Air Control Valve	34979	VOLKSWAGEN	AMAROK	2.0 TDI 4motion	09.2010		90	122	1968	4	CDBA		
A2C59515370	Luftregelventil / Air Control Valve	34979	VOLKSWAGEN	AMAROK	2.0 TDI 4motion	09.2010		90	122	1968	4	CDBA		
A2C59515370	Luftregelventil / Air Control Valve	34979	VOLKSWAGEN	AMAROK	2.0 TDI 4motion	09.2010		90	122	1968	4	CDBA		
A2C59515370	Luftregelventil / Air Control Valve	34979	VOLKSWAGEN	AMAROK	2.0 TDI 4motion	09.2010		90	122	1968	4	CDBA		
A2C59515370	Luftregelventil / Air Control Valve	10812	VOLKSWAGEN	CRAFTER 30-35 Bus (2E_)	2.0 TDI	05.2011		80	109	1968	4	CKTB		
A2C59515370	Luftregelventil / Air Control Valve	10812	VOLKSWAGEN	CRAFTER 30-35 Bus (2E_)	2.0 TDI	05.2011		80	109	1968	4	CKTB		
A2C59515370	Luftregelventil / Air Control Valve	10812	VOLKSWAGEN	CRAFTER 30-35 Bus (2E_)	2.0 TDI	05.2011		80	109	1968	4	CKTB		
A2C59515370	Luftregelventil / Air Control Valve	10812	VOLKSWAGEN	CRAFTER 30-35 Bus (2E_)	2.0 TDI	05.2011		80	109	1968	4	CKTB		
A2C59515370	Luftregelventil / Air Control Valve	10812	VOLKSWAGEN	CRAFTER 30-35 Bus (2E_)	2.0 TDI	05.2011		80	109	1968	4	CKTB		
A2C59515370	Luftregelventil / Air Control Valve	10812	VOLKSWAGEN	CRAFTER 30-35 Bus (2E_)	2.0 TDI	05.2011		80	109	1968	4	CKTB		
A2C59515370	Luftregelventil / Air Control Valve	10812	VOLKSWAGEN	CRAFTER 30-35 Bus (2E_)	2.0 TDI	05.2011		80	109	1968	4	CKTB		
A2C59515370	Luftregelventil / Air Control Valve	10812	VOLKSWAGEN	CRAFTER 30-35 Bus (2E_)	2.0 TDI	05.2011		80	109	1968	4	CKTB		
A2C59515370	Luftregelventil / Air Control Valve	10813	VOLKSWAGEN	CRAFTER 30-35 Bus (2E_)	2.0 TDI	05.2011		100	136	1968	4	CKTC		
A2C59515370	Luftregelventil / Air Control Valve	10813	VOLKSWAGEN	CRAFTER 30-35 Bus (2E_)	2.0 TDI	05.2011		100	136	1968	4	CKTC		
A2C59515370	Luftregelventil / Air Control Valve	10813	VOLKSWAGEN	CRAFTER 30-35 Bus (2E_)	2.0 TDI	05.2011		100	136	1968	4	CKTC		
A2C59515370	Luftregelventil / Air Control Valve	10813	VOLKSWAGEN	CRAFTER 30-35 Bus (2E_)	2.0 TDI	05.2011		100	136	1968	4	CKTC		
A2C59515370	Luftregelventil / Air Control Valve	10813	VOLKSWAGEN	CRAFTER 30-35 Bus (2E_)	2.0 TDI	05.2011		100	136	1968	4	CKTC		
A2C59515370	Luftregelventil / Air Control Valve	10813	VOLKSWAGEN	CRAFTER 30-35 Bus (2E_)	2.0 TDI	05.2011		100	136	1968	4	CKTC		
A2C59515370	Luftregelventil / Air Control Valve	10813	VOLKSWAGEN	CRAFTER 30-35 Bus (2E_)	2.0 TDI	05.2011		100	136	1968	4	CKTC		
A2C59515370	Luftregelventil / Air Control Valve	10813	VOLKSWAGEN	CRAFTER 30-35 Bus (2E_)	2.0 TDI	05.2011		100	136	1968	4	CKTC		
A2C59515370	Luftregelventil / Air Control Valve	10814	VOLKSWAGEN	CRAFTER 30-35 Bus (2E_)	2.0 TDI	07.2011		120	163	1968	4	CKUB		
A2C59515370	Luftregelventil / Air Control Valve	10814	VOLKSWAGEN	CRAFTER 30-35 Bus (2E_)	2.0 TDI	07.2011		120	163	1968	4	CKUB		
A2C59515370	Luftregelventil / Air Control Valve	10814	VOLKSWAGEN	CRAFTER 30-35 Bus (2E_)	2.0 TDI	07.2011		120	163	1968	4	CKUB		
A2C59515370	Luftregelventil / Air Control Valve	10814	VOLKSWAGEN	CRAFTER 30-35 Bus (2E_)	2.0 TDI	07.2011		120	163	1968	4	CKUB		
A2C59515370	Luftregelventil / Air Control Valve	10814	VOLKSWAGEN	CRAFTER 30-35 Bus (2E_)	2.0 TDI	07.2011		120	163	1968	4	CKUB		

Anhang Applikationen / Addendum Applications

VDO Nr.	Bezeichnung	TecDoc - KtypNr.	Hersteller	Model	Typ	Von Jahr	Bis Jahr	kw	ps	L	Zyl.	Motorcode	Einschränkung1	Einschränkung1 - Wert
VDO No.	Name	TecDoc - Ktypeno.	Manufacturer	Model	Type	Year from	Year to	kw	ps	L	Cyl.	Motorcode	Restriction1	Restriction1 - Value
A2C59515370	Luftregelventil / Air Control Valve	10814	VOLKSWAGEN	CRAFTER 30-35 Bus (2E_)	2.0 TDI	07.2011		120	163	1968	4	CKUB		
A2C59515370	Luftregelventil / Air Control Valve	10814	VOLKSWAGEN	CRAFTER 30-35 Bus (2E_)	2.0 TDI	07.2011		120	163	1968	4	CKUB		
A2C59515370	Luftregelventil / Air Control Valve	10814	VOLKSWAGEN	CRAFTER 30-35 Bus (2E_)	2.0 TDI	07.2011		120	163	1968	4	CKUB		
A2C59515370	Luftregelventil / Air Control Valve	10828	VOLKSWAGEN	CRAFTER 30-35 Bus (2E_)	2.0 TDI	10.2011		105	142	1968	4	CKUC		
A2C59515370	Luftregelventil / Air Control Valve	10828	VOLKSWAGEN	CRAFTER 30-35 Bus (2E_)	2.0 TDI	10.2011		105	142	1968	4	CKUC		
A2C59515370	Luftregelventil / Air Control Valve	10828	VOLKSWAGEN	CRAFTER 30-35 Bus (2E_)	2.0 TDI	10.2011		105	142	1968	4	CKUC		
A2C59515370	Luftregelventil / Air Control Valve	10828	VOLKSWAGEN	CRAFTER 30-35 Bus (2E_)	2.0 TDI	10.2011		105	142	1968	4	CKUC		
A2C59515370	Luftregelventil / Air Control Valve	10828	VOLKSWAGEN	CRAFTER 30-35 Bus (2E_)	2.0 TDI	10.2011		105	142	1968	4	CKUC		
A2C59515370	Luftregelventil / Air Control Valve	10828	VOLKSWAGEN	CRAFTER 30-35 Bus (2E_)	2.0 TDI	10.2011		105	142	1968	4	CKUC		
A2C59515370	Luftregelventil / Air Control Valve	10828	VOLKSWAGEN	CRAFTER 30-35 Bus (2E_)	2.0 TDI	10.2011		105	142	1968	4	CKUC		
A2C59515370	Luftregelventil / Air Control Valve	10828	VOLKSWAGEN	CRAFTER 30-35 Bus (2E_)	2.0 TDI	10.2011		105	142	1968	4	CKUC		
A2C59515370	Luftregelventil / Air Control Valve	55113	VOLKSWAGEN	CRAFTER 30-35 Bus (2E_)	2.0 TDI 4motion	11.2011		120	163	1968	4	CKUB		
A2C59515370	Luftregelventil / Air Control Valve	55113	VOLKSWAGEN	CRAFTER 30-35 Bus (2E_)	2.0 TDI 4motion	11.2011		120	163	1968	4	CKUB		
A2C59515370	Luftregelventil / Air Control Valve	55113	VOLKSWAGEN	CRAFTER 30-35 Bus (2E_)	2.0 TDI 4motion	11.2011		120	163	1968	4	CKUB		
A2C59515370	Luftregelventil / Air Control Valve	55113	VOLKSWAGEN	CRAFTER 30-35 Bus (2E_)	2.0 TDI 4motion	11.2011		120	163	1968	4	CKUB		
A2C59515370	Luftregelventil / Air Control Valve	55113	VOLKSWAGEN	CRAFTER 30-35 Bus (2E_)	2.0 TDI 4motion	11.2011		120	163	1968	4	CKUB		
A2C59515370	Luftregelventil / Air Control Valve	55113	VOLKSWAGEN	CRAFTER 30-35 Bus (2E_)	2.0 TDI 4motion	11.2011		120	163	1968	4	CKUB		
A2C59515370	Luftregelventil / Air Control Valve	55113	VOLKSWAGEN	CRAFTER 30-35 Bus (2E_)	2.0 TDI 4motion	11.2011		120	163	1968	4	CKUB		
A2C59515370	Luftregelventil / Air Control Valve	10815	VOLKSWAGEN	CRAFTER 30-50 Kasten (2E_)	2.0 TDI	05.2011		80	109	1968	4	CKTB		
A2C59515370	Luftregelventil / Air Control Valve	10815	VOLKSWAGEN	CRAFTER 30-50 Kasten (2E_)	2.0 TDI	05.2011		80	109	1968	4	CKTB		
A2C59515370	Luftregelventil / Air Control Valve	10815	VOLKSWAGEN	CRAFTER 30-50 Kasten (2E_)	2.0 TDI	05.2011		80	109	1968	4	CKTB		
A2C59515370	Luftregelventil / Air Control Valve	10815	VOLKSWAGEN	CRAFTER 30-50 Kasten (2E_)	2.0 TDI	05.2011		80	109	1968	4	CKTB		
A2C59515370	Luftregelventil / Air Control Valve	10815	VOLKSWAGEN	CRAFTER 30-50 Kasten (2E_)	2.0 TDI	05.2011		80	109	1968	4	CKTB		
A2C59515370	Luftregelventil / Air Control Valve	10815	VOLKSWAGEN	CRAFTER 30-50 Kasten (2E_)	2.0 TDI	05.2011		80	109	1968	4	CKTB		
A2C59515370	Luftregelventil / Air Control Valve	10815	VOLKSWAGEN	CRAFTER 30-50 Kasten (2E_)	2.0 TDI	05.2011		80	109	1968	4	CKTB		
A2C59515370	Luftregelventil / Air Control Valve	10817	VOLKSWAGEN	CRAFTER 30-50 Kasten (2E_)	2.0 TDI	05.2011		100	136	1968	4	CKTC		
A2C59515370	Luftregelventil / Air Control Valve	10817	VOLKSWAGEN	CRAFTER 30-50 Kasten (2E_)	2.0 TDI	05.2011		100	136	1968	4	CKTC		
A2C59515370	Luftregelventil / Air Control Valve	10817	VOLKSWAGEN	CRAFTER 30-50 Kasten (2E_)	2.0 TDI	05.2011		100	136	1968	4	CKTC		
A2C59515370	Luftregelventil / Air Control Valve	10817	VOLKSWAGEN	CRAFTER 30-50 Kasten (2E_)	2.0 TDI	05.2011		100	136	1968	4	CKTC		
A2C59515370	Luftregelventil / Air Control Valve	10817	VOLKSWAGEN	CRAFTER 30-50 Kasten (2E_)	2.0 TDI	05.2011		100	136	1968	4	CKTC		
A2C59515370	Luftregelventil / Air Control Valve	10817	VOLKSWAGEN	CRAFTER 30-50 Kasten (2E_)	2.0 TDI	05.2011		100	136	1968	4	CKTC		
A2C59515370	Luftregelventil / Air Control Valve	10817	VOLKSWAGEN	CRAFTER 30-50 Kasten (2E_)	2.0 TDI	05.2011		100	136	1968	4	CKTC		
A2C59515370	Luftregelventil / Air Control Valve	10817	VOLKSWAGEN	CRAFTER 30-50 Kasten (2E_)	2.0 TDI	05.2011		100	136	1968	4	CKTC		
A2C59515370	Luftregelventil / Air Control Valve	10818	VOLKSWAGEN	CRAFTER 30-50 Kasten (2E_)	2.0 TDI	07.2011		120	163	1968	4	CKUB		
A2C59515370	Luftregelventil / Air Control Valve	10818	VOLKSWAGEN	CRAFTER 30-50 Kasten (2E_)	2.0 TDI	07.2011		120	163	1968	4	CKUB		
A2C59515370	Luftregelventil / Air Control Valve	10818	VOLKSWAGEN	CRAFTER 30-50 Kasten (2E_)	2.0 TDI	07.2011		120	163	1968	4	CKUB		
A2C59515370	Luftregelventil / Air Control Valve	10818	VOLKSWAGEN	CRAFTER 30-50 Kasten (2E_)	2.0 TDI	07.2011		120	163	1968	4	CKUB		
A2C59515370	Luftregelventil / Air Control Valve	10818	VOLKSWAGEN	CRAFTER 30-50 Kasten (2E_)	2.0 TDI	07.2011		120	163	1968	4	CKUB		
A2C59515370	Luftregelventil / Air Control Valve	10818	VOLKSWAGEN	CRAFTER 30-50 Kasten (2E_)	2.0 TDI	07.2011		120	163	1968	4	CKUB		
A2C59515370	Luftregelventil / Air Control Valve	10818	VOLKSWAGEN	CRAFTER 30-50 Kasten (2E_)	2.0 TDI	07.2011		120	163	1968	4	CKUB		
A2C59515370	Luftregelventil / Air Control Valve	10829	VOLKSWAGEN	CRAFTER 30-50 Kasten (2E_)	2.0 TDI	10.2011		105	142	1968	4	CKUC		
A2C59515370	Luftregelventil / Air Control Valve	10829	VOLKSWAGEN	CRAFTER 30-50 Kasten (2E_)	2.0 TDI	10.2011		105	142	1968	4	CKUC		
A2C59515370	Luftregelventil / Air Control Valve	10829	VOLKSWAGEN	CRAFTER 30-50 Kasten (2E_)	2.0 TDI	10.2011		105	142	1968	4	CKUC		
A2C59515370	Luftregelventil / Air Control Valve	10829	VOLKSWAGEN	CRAFTER 30-50 Kasten (2E_)	2.0 TDI	10.2011		105	142	1968	4	CKUC		
A2C59515370	Luftregelventil / Air Control Valve	10829	VOLKSWAGEN	CRAFTER 30-50 Kasten (2E_)	2.0 TDI	10.2011		105	142	1968	4	CKUC		
A2C59515370	Luftregelventil / Air Control Valve	10829	VOLKSWAGEN	CRAFTER 30-50 Kasten (2E_)	2.0 TDI	10.2011		105	142	1968	4	CKUC		
A2C59515370	Luftregelventil / Air Control Valve	10829	VOLKSWAGEN	CRAFTER 30-50 Kasten (2E_)	2.0 TDI	10.2011		105	142	1968	4	CKUC		
A2C59515370	Luftregelventil / Air Control Valve	10829	VOLKSWAGEN	CRAFTER 30-50 Kasten (2E_)	2.0 TDI	10.2011		105	142	1968	4	CKUC		
A2C59515370	Luftregelventil / Air Control Valve	55114	VOLKSWAGEN	CRAFTER 30-50 Kasten (2E_)	2.0 TDI 4motion	11.2011		120	163	1968	4	CKUB		
A2C59515370	Luftregelventil / Air Control Valve	55114	VOLKSWAGEN	CRAFTER 30-50 Kasten (2E_)	2.0 TDI 4motion	11.2011		120	163	1968	4	CKUB		
A2C59515370	Luftregelventil / Air Control Valve	55114	VOLKSWAGEN	CRAFTER 30-50 Kasten (2E_)	2.0 TDI 4motion	11.2011		120	163	1968	4	CKUB		
A2C59515370	Luftregelventil / Air Control Valve	55114	VOLKSWAGEN	CRAFTER 30-50 Kasten (2E_)	2.0 TDI 4motion	11.2011		120	163	1968	4	CKUB		
A2C59515370	Luftregelventil / Air Control Valve	55114	VOLKSWAGEN	CRAFTER 30-50 Kasten (2E_)	2.0 TDI 4motion	11.2011		120	163	1968	4	CKUB		
A2C59515370	Luftregelventil / Air Control Valve	55114	VOLKSWAGEN	CRAFTER 30-50 Kasten (2E_)	2.0 TDI 4motion	11.2011		120	163	1968	4	CKUB		
A2C59515370	Luftregelventil / Air Control Valve	55114	VOLKSWAGEN	CRAFTER 30-50 Kasten (2E_)	2.0 TDI 4motion	11.2011		120	163	1968	4	CKUB		
A2C59515370	Luftregelventil / Air Control Valve	10824	VOLKSWAGEN	CRAFTER 30-50 Pritsche/Fahrgestell (2F_)	2.0 TDI	05.2011		80	109	1968	4	CKTB		
A2C59515370	Luftregelventil / Air Control Valve	10824	VOLKSWAGEN	CRAFTER 30-50 Pritsche/Fahrgestell (2F_)	2.0 TDI	05.2011		80	109	1968	4	CKTB		
A2C59515370	Luftregelventil / Air Control Valve	10824	VOLKSWAGEN	CRAFTER 30-50 Pritsche/Fahrgestell (2F_)	2.0 TDI	05.2011		80	109	1968	4	CKTB		
A2C59515370	Luftregelventil / Air Control Valve	10824	VOLKSWAGEN	CRAFTER 30-50 Pritsche/Fahrgestell (2F_)	2.0 TDI	05.2011		80	109	1968	4	CKTB		
A2C59515370	Luftregelventil / Air Control Valve	10824	VOLKSWAGEN	CRAFTER 30-50 Pritsche/Fahrgestell (2F_)	2.0 TDI	05.2011		80	109	1968	4	CKTB		

Anhang Applikationen / Addendum Applications

VDO Nr.	Bezeichnung	TecDoc - KtypNr.	Hersteller	Model	Typ	Von Jahr	Bis Jahr	kw	ps	L	Zyl.	Motorcode	Einschränkung1	Einschränkung1 - Wert
VDO No.	Name	TecDoc - Ktypeno.	Manufacturer	Model	Type	Year from	Year to	kw	ps	L	Cyl.	Motorcode	Restriction1	Restriction1 - Value
A2C59515370	Luftregelventil / Air Control Valve	10824	VOLKSWAGEN	CRAFTER 30-50 Pritsche/Fahrgestell (2F_)	2.0 TDI	05.2011		80	109	1968	4	CKTB		
A2C59515370	Luftregelventil / Air Control Valve	10824	VOLKSWAGEN	CRAFTER 30-50 Pritsche/Fahrgestell (2F_)	2.0 TDI	05.2011		80	109	1968	4	CKTB		
A2C59515370	Luftregelventil / Air Control Valve	10824	VOLKSWAGEN	CRAFTER 30-50 Pritsche/Fahrgestell (2F_)	2.0 TDI	05.2011		80	109	1968	4	CKTB		
A2C59515370	Luftregelventil / Air Control Valve	10824	VOLKSWAGEN	CRAFTER 30-50 Pritsche/Fahrgestell (2F_)	2.0 TDI	05.2011		80	109	1968	4	CKTB		
A2C59515370	Luftregelventil / Air Control Valve	10825	VOLKSWAGEN	CRAFTER 30-50 Pritsche/Fahrgestell (2F_)	2.0 TDI	05.2011		100	136	1968	4	CKTC		
A2C59515370	Luftregelventil / Air Control Valve	10825	VOLKSWAGEN	CRAFTER 30-50 Pritsche/Fahrgestell (2F_)	2.0 TDI	05.2011		100	136	1968	4	CKTC		
A2C59515370	Luftregelventil / Air Control Valve	10825	VOLKSWAGEN	CRAFTER 30-50 Pritsche/Fahrgestell (2F_)	2.0 TDI	05.2011		100	136	1968	4	CKTC		
A2C59515370	Luftregelventil / Air Control Valve	10825	VOLKSWAGEN	CRAFTER 30-50 Pritsche/Fahrgestell (2F_)	2.0 TDI	05.2011		100	136	1968	4	CKTC		
A2C59515370	Luftregelventil / Air Control Valve	10825	VOLKSWAGEN	CRAFTER 30-50 Pritsche/Fahrgestell (2F_)	2.0 TDI	05.2011		100	136	1968	4	CKTC		
A2C59515370	Luftregelventil / Air Control Valve	10825	VOLKSWAGEN	CRAFTER 30-50 Pritsche/Fahrgestell (2F_)	2.0 TDI	05.2011		100	136	1968	4	CKTC		
A2C59515370	Luftregelventil / Air Control Valve	10825	VOLKSWAGEN	CRAFTER 30-50 Pritsche/Fahrgestell (2F_)	2.0 TDI	05.2011		100	136	1968	4	CKTC		
A2C59515370	Luftregelventil / Air Control Valve	10826	VOLKSWAGEN	CRAFTER 30-50 Pritsche/Fahrgestell (2F_)	2.0 TDI	07.2011		120	163	1968	4	CKUB		
A2C59515370	Luftregelventil / Air Control Valve	10826	VOLKSWAGEN	CRAFTER 30-50 Pritsche/Fahrgestell (2F_)	2.0 TDI	07.2011		120	163	1968	4	CKUB		
A2C59515370	Luftregelventil / Air Control Valve	10826	VOLKSWAGEN	CRAFTER 30-50 Pritsche/Fahrgestell (2F_)	2.0 TDI	07.2011		120	163	1968	4	CKUB		
A2C59515370	Luftregelventil / Air Control Valve	10826	VOLKSWAGEN	CRAFTER 30-50 Pritsche/Fahrgestell (2F_)	2.0 TDI	07.2011		120	163	1968	4	CKUB		
A2C59515370	Luftregelventil / Air Control Valve	10826	VOLKSWAGEN	CRAFTER 30-50 Pritsche/Fahrgestell (2F_)	2.0 TDI	07.2011		120	163	1968	4	CKUB		
A2C59515370	Luftregelventil / Air Control Valve	10826	VOLKSWAGEN	CRAFTER 30-50 Pritsche/Fahrgestell (2F_)	2.0 TDI	07.2011		120	163	1968	4	CKUB		
A2C59515370	Luftregelventil / Air Control Valve	10826	VOLKSWAGEN	CRAFTER 30-50 Pritsche/Fahrgestell (2F_)	2.0 TDI	07.2011		120	163	1968	4	CKUB		
A2C59515370	Luftregelventil / Air Control Valve	10827	VOLKSWAGEN	CRAFTER 30-50 Pritsche/Fahrgestell (2F_)	2.0 TDI	10.2011		105	142	1968	4	CKUC		
A2C59515370	Luftregelventil / Air Control Valve	10827	VOLKSWAGEN	CRAFTER 30-50 Pritsche/Fahrgestell (2F_)	2.0 TDI	10.2011		105	142	1968	4	CKUC		
A2C59515370	Luftregelventil / Air Control Valve	10827	VOLKSWAGEN	CRAFTER 30-50 Pritsche/Fahrgestell (2F_)	2.0 TDI	10.2011		105	142	1968	4	CKUC		
A2C59515370	Luftregelventil / Air Control Valve	10827	VOLKSWAGEN	CRAFTER 30-50 Pritsche/Fahrgestell (2F_)	2.0 TDI	10.2011		105	142	1968	4	CKUC		
A2C59515370	Luftregelventil / Air Control Valve	10827	VOLKSWAGEN	CRAFTER 30-50 Pritsche/Fahrgestell (2F_)	2.0 TDI	10.2011		105	142	1968	4	CKUC		
A2C59515370	Luftregelventil / Air Control Valve	10827	VOLKSWAGEN	CRAFTER 30-50 Pritsche/Fahrgestell (2F_)	2.0 TDI	10.2011		105	142	1968	4	CKUC		
A2C59515370	Luftregelventil / Air Control Valve	10827	VOLKSWAGEN	CRAFTER 30-50 Pritsche/Fahrgestell (2F_)	2.0 TDI	10.2011		105	142	1968	4	CKUC		
A2C59515370	Luftregelventil / Air Control Valve	10827	VOLKSWAGEN	CRAFTER 30-50 Pritsche/Fahrgestell (2F_)	2.0 TDI	10.2011		105	142	1968	4	CKUC		
A2C59515370	Luftregelventil / Air Control Valve	55115	VOLKSWAGEN	CRAFTER 30-50 Pritsche/Fahrgestell (2F_)	2.0 TDI 4motion	11.2011		120	163	1968	4	CKUB		
A2C59515370	Luftregelventil / Air Control Valve	55115	VOLKSWAGEN	CRAFTER 30-50 Pritsche/Fahrgestell (2F_)	2.0 TDI 4motion	11.2011		120	163	1968	4	CKUB		
A2C59515370	Luftregelventil / Air Control Valve	55115	VOLKSWAGEN	CRAFTER 30-50 Pritsche/Fahrgestell (2F_)	2.0 TDI 4motion	11.2011		120	163	1968	4	CKUB		
A2C59515370	Luftregelventil / Air Control Valve	55115	VOLKSWAGEN	CRAFTER 30-50 Pritsche/Fahrgestell (2F_)	2.0 TDI 4motion	11.2011		120	163	1968	4	CKUB		
A2C59515370	Luftregelventil / Air Control Valve	55115	VOLKSWAGEN	CRAFTER 30-50 Pritsche/Fahrgestell (2F_)	2.0 TDI 4motion	11.2011		120	163	1968	4	CKUB		
A2C59515370	Luftregelventil / Air Control Valve	55115	VOLKSWAGEN	CRAFTER 30-50 Pritsche/Fahrgestell (2F_)	2.0 TDI 4motion	11.2011		120	163	1968	4	CKUB		
A2C59515370	Luftregelventil / Air Control Valve	55115	VOLKSWAGEN	CRAFTER 30-50 Pritsche/Fahrgestell (2F_)	2.0 TDI 4motion	11.2011		120	163	1968	4	CKUB		
A2C59515370	Luftregelventil / Air Control Valve	55115	VOLKSWAGEN	CRAFTER 30-50 Pritsche/Fahrgestell (2F_)	2.0 TDI 4motion	11.2011		120	163	1968	4	CKUB		
A2C59515370	Luftregelventil / Air Control Valve	32270	VOLKSWAGEN	MULTIVAN T5 (7HM, 7HN, 7HF, 7EF, 7EM, 7EN)	2.0 BiTDI	09.2009		132	180	1968	4	CFCA	From Chassis No.:	7H-A-200 001
A2C59515370	Luftregelventil / Air Control Valve	32270	VOLKSWAGEN	MULTIVAN T5 (7HM, 7HN, 7HF, 7EF, 7EM, 7EN)	2.0 BiTDI	09.2009		132	180	1968	4	CFCA	From Chassis No.:	7H-A-200 001
A2C59515370	Luftregelventil / Air Control Valve	32270	VOLKSWAGEN	MULTIVAN T5 (7HM, 7HN, 7HF, 7EF, 7EM, 7EN)	2.0 BiTDI	09.2009		132	180	1968	4	CFCA	From Chassis No.:	7H-A-200 001
A2C59515370	Luftregelventil / Air Control Valve	32270	VOLKSWAGEN	MULTIVAN T5 (7HM, 7HN, 7HF, 7EF, 7EM, 7EN)	2.0 BiTDI	09.2009		132	180	1968	4	CFCA	From Chassis No.:	7H-A-200 001
A2C59515370	Luftregelventil / Air Control Valve	32270	VOLKSWAGEN	MULTIVAN T5 (7HM, 7HN, 7HF, 7EF, 7EM, 7EN)	2.0 BiTDI	09.2009		132	180	1968	4	CFCA	From Chassis No.:	7H-A-200 001
A2C59515370	Luftregelventil / Air Control Valve	32270	VOLKSWAGEN	MULTIVAN T5 (7HM, 7HN, 7HF, 7EF, 7EM, 7EN)	2.0 BiTDI	09.2009		132	180	1968	4	CFCA	From Chassis No.:	7H-A-200 001
A2C59515370	Luftregelventil / Air Control Valve	32270	VOLKSWAGEN	MULTIVAN T5 (7HM, 7HN, 7HF, 7EF, 7EM, 7EN)	2.0 BiTDI	09.2009		132	180	1968	4	CFCA	From Chassis No.:	7H-A-200 001
A2C59515370	Luftregelventil / Air Control Valve	32271	VOLKSWAGEN	MULTIVAN T5 (7HM, 7HN, 7HF, 7EF, 7EM, 7EN)	2.0 BiTDI 4motion	09.2009		132	180	1968	4	CFCA	From Chassis No.:	7H-A-200 001
A2C59515370	Luftregelventil / Air Control Valve	32271	VOLKSWAGEN	MULTIVAN T5 (7HM, 7HN, 7HF, 7EF, 7EM, 7EN)	2.0 BiTDI 4motion	09.2009		132	180	1968	4	CFCA	From Chassis No.:	7H-A-200 001
A2C59515370	Luftregelventil / Air Control Valve	32271	VOLKSWAGEN	MULTIVAN T5 (7HM, 7HN, 7HF, 7EF, 7EM, 7EN)	2.0 BiTDI 4motion	09.2009		132	180	1968	4	CFCA	From Chassis No.:	7H-A-200 001
A2C59515370	Luftregelventil / Air Control Valve	32271	VOLKSWAGEN	MULTIVAN T5 (7HM, 7HN, 7HF, 7EF, 7EM, 7EN)	2.0 BiTDI 4motion	09.2009		132	180	1968	4	CFCA	From Chassis No.:	7H-A-200 001
A2C59515370	Luftregelventil / Air Control Valve	32271	VOLKSWAGEN	MULTIVAN T5 (7HM, 7HN, 7HF, 7EF, 7EM, 7EN)	2.0 BiTDI 4motion	09.2009		132	180	1968	4	CFCA	From Chassis No.:	7H-A-200 001
A2C59515370	Luftregelventil / Air Control Valve	32271	VOLKSWAGEN	MULTIVAN T5 (7HM, 7HN, 7HF, 7EF, 7EM, 7EN)	2.0 BiTDI 4motion	09.2009		132	180	1968	4	CFCA	From Chassis No.:	7H-A-200 001
A2C59515370	Luftregelventil / Air Control Valve	3873	VOLKSWAGEN	MULTIVAN T5 (7HM, 7HN, 7HF, 7EF, 7EM, 7EN)	2.0 TDI	05.2010		100	136	1968	4	CAAE	From Chassis No.:	7H-A-200 001
A2C59515370	Luftregelventil / Air Control Valve	3873	VOLKSWAGEN	MULTIVAN T5 (7HM, 7HN, 7HF, 7EF, 7EM, 7EN)	2.0 TDI	05.2010		100	136	1968	4	CCHB	From Chassis No.:	7H-A-200 001
A2C59515370	Luftregelventil / Air Control Valve	3873	VOLKSWAGEN	MULTIVAN T5 (7HM, 7HN, 7HF, 7EF, 7EM, 7EN)	2.0 TDI	05.2010		100	136	1968	4	CAAE	From Chassis No.:	7H-A-200 001
A2C59515370	Luftregelventil / Air Control Valve	3873	VOLKSWAGEN	MULTIVAN T5 (7HM, 7HN, 7HF, 7EF, 7EM, 7EN)	2.0 TDI	05.2010		100	136	1968	4	CCHB	From Chassis No.:	7H-A-200 001
A2C59515370	Luftregelventil / Air Control Valve	27168	VOLKSWAGEN	MULTIVAN T5 (7HM, 7HN, 7HF, 7EF, 7EM, 7EN)	2.0 TDI	05.2011		84	114	1968	4	CAAD	From Chassis No.:	7H-A-200 001
A2C59515370	Luftregelventil / Air Control Valve	27168	VOLKSWAGEN	MULTIVAN T5 (7HM, 7HN, 7HF, 7EF, 7EM, 7EN)	2.0 TDI	05.2011		84	114	1968	4	CAAD	From Chassis No.:	7H-A-200 001
A2C59515370	Luftregelventil / Air Control Valve	27168	VOLKSWAGEN	MULTIVAN T5 (7HM, 7HN, 7HF, 7EF, 7EM, 7EN)	2.0 TDI	05.2011		84	114	1968	4	CAAD	From Chassis No.:	7H-A-200 001
A2C59515370	Luftregelventil / Air Control Valve	27168	VOLKSWAGEN	MULTIVAN T5 (7HM, 7HN, 7HF, 7EF, 7EM, 7EN)	2.0 TDI	05.2011		84	114	1968	4	CAAD	From Chassis No.:	7H-A-200 001
A2C59515370	Luftregelventil / Air Control Valve	27168	VOLKSWAGEN	MULTIVAN T5 (7HM, 7HN, 7HF, 7EF, 7EM, 7EN)	2.0 TDI	05.2011		84	114	1968	4	CAAD	From Chassis No.:	7H-A-200 001
A2C59515370	Luftregelventil / Air Control Valve	27168	VOLKSWAGEN	MULTIVAN T5 (7HM, 7HN, 7HF, 7EF, 7EM, 7EN)	2.0 TDI	05.2011		84	114	1968	4	CAAD	From Chassis No.:	7H-A-200 001
A2C59515370	Luftregelventil / Air Control Valve	27168	VOLKSWAGEN	MULTIVAN T5 (7HM, 7HN, 7HF, 7EF, 7EM, 7EN)	2.0 TDI	05.2011		84	114	1968	4	CAAD	From Chassis No.:	7H-A-200 001
A2C59515370	Luftregelventil / Air Control Valve	27168	VOLKSWAGEN	MULTIVAN T5 (7HM, 7HN, 7HF, 7EF, 7EM, 7EN)	2.0 TDI	05.2011		84	114	1968	4	CAAD	From Chassis No.:	7H-A-200 001
A2C59515370	Luftregelventil / Air Control Valve	27168	VOLKSWAGEN	MULTIVAN T5 (7HM, 7HN, 7HF, 7EF, 7EM, 7EN)	2.0 TDI	05.2011		84	114	1968	4	CAAD	From Chassis No.:	7H-A-200 001
A2C59515370	Luftregelventil / Air Control Valve	32254	VOLKSWAGEN	MULTIVAN T5 (7HM, 7HN, 7HF, 7EF, 7EM, 7EN)	2.0 TDI	09.2009		62	84	1968	4	CAAA	From Chassis No.:	7H-A-200 001

Anhang Applikationen / Addendum Applications

VDO Nr.	Bezeichnung	TecDoc - KtypNr.	Hersteller	Model	Typ	Von Jahr	Bis Jahr	kw	ps	L	Zyl.	Motorcode	Einschränkung1	Einschränkung1 - Wert
VDO No.	Name	TecDoc - Ktypeno.	Manufacturer	Model	Type	Year from	Year to	kw	ps	L	Cyl.	Motorcode	Restriction1	Restriction1 - Value
A2C59515370	Luftregelventil / Air Control Valve	32254	VOLKSWAGEN	MULTIVAN T5 (7HM, 7HN, 7HF, 7EF, 7EM, 7EN)	2.0 TDI	09.2009		62	84	1968	4	CAAA	From Chassis No.:	7H-A-200 001
A2C59515370	Luftregelventil / Air Control Valve	32254	VOLKSWAGEN	MULTIVAN T5 (7HM, 7HN, 7HF, 7EF, 7EM, 7EN)	2.0 TDI	09.2009		62	84	1968	4	CAAA	From Chassis No.:	7H-A-200 001
A2C59515370	Luftregelventil / Air Control Valve	32254	VOLKSWAGEN	MULTIVAN T5 (7HM, 7HN, 7HF, 7EF, 7EM, 7EN)	2.0 TDI	09.2009		62	84	1968	4	CAAA	From Chassis No.:	7H-A-200 001
A2C59515370	Luftregelventil / Air Control Valve	32254	VOLKSWAGEN	MULTIVAN T5 (7HM, 7HN, 7HF, 7EF, 7EM, 7EN)	2.0 TDI	09.2009		62	84	1968	4	CAAA	From Chassis No.:	7H-A-200 001
A2C59515370	Luftregelventil / Air Control Valve	32254	VOLKSWAGEN	MULTIVAN T5 (7HM, 7HN, 7HF, 7EF, 7EM, 7EN)	2.0 TDI	09.2009		62	84	1968	4	CAAA	From Chassis No.:	7H-A-200 001
A2C59515370	Luftregelventil / Air Control Valve	32254	VOLKSWAGEN	MULTIVAN T5 (7HM, 7HN, 7HF, 7EF, 7EM, 7EN)	2.0 TDI	09.2009		62	84	1968	4	CAAA	From Chassis No.:	7H-A-200 001
A2C59515370	Luftregelventil / Air Control Valve	32254	VOLKSWAGEN	MULTIVAN T5 (7HM, 7HN, 7HF, 7EF, 7EM, 7EN)	2.0 TDI	09.2009		62	84	1968	4	CAAA	From Chassis No.:	7H-A-200 001
A2C59515370	Luftregelventil / Air Control Valve	32261	VOLKSWAGEN	MULTIVAN T5 (7HM, 7HN, 7HF, 7EF, 7EM, 7EN)	2.0 TDI	09.2009		75	102	1968	4	CAAB	From Chassis No.:	7H-A-200 001
A2C59515370	Luftregelventil / Air Control Valve	32261	VOLKSWAGEN	MULTIVAN T5 (7HM, 7HN, 7HF, 7EF, 7EM, 7EN)	2.0 TDI	09.2009		75	102	1968	4	CAAB	From Chassis No.:	7H-A-200 001
A2C59515370	Luftregelventil / Air Control Valve	32261	VOLKSWAGEN	MULTIVAN T5 (7HM, 7HN, 7HF, 7EF, 7EM, 7EN)	2.0 TDI	09.2009		75	102	1968	4	CAAB	From Chassis No.:	7H-A-200 001
A2C59515370	Luftregelventil / Air Control Valve	32261	VOLKSWAGEN	MULTIVAN T5 (7HM, 7HN, 7HF, 7EF, 7EM, 7EN)	2.0 TDI	09.2009		75	102	1968	4	CAAB	From Chassis No.:	7H-A-200 001
A2C59515370	Luftregelventil / Air Control Valve	32261	VOLKSWAGEN	MULTIVAN T5 (7HM, 7HN, 7HF, 7EF, 7EM, 7EN)	2.0 TDI	09.2009		75	102	1968	4	CAAB	From Chassis No.:	7H-A-200 001
A2C59515370	Luftregelventil / Air Control Valve	32261	VOLKSWAGEN	MULTIVAN T5 (7HM, 7HN, 7HF, 7EF, 7EM, 7EN)	2.0 TDI	09.2009		75	102	1968	4	CAAB	From Chassis No.:	7H-A-200 001
A2C59515370	Luftregelventil / Air Control Valve	32261	VOLKSWAGEN	MULTIVAN T5 (7HM, 7HN, 7HF, 7EF, 7EM, 7EN)	2.0 TDI	09.2009		75	102	1968	4	CAAB	From Chassis No.:	7H-A-200 001
A2C59515370	Luftregelventil / Air Control Valve	32262	VOLKSWAGEN	MULTIVAN T5 (7HM, 7HN, 7HF, 7EF, 7EM, 7EN)	2.0 TDI	09.2009		103	140	1968	4	CAAC	From Chassis No.:	7H-A-200 001
A2C59515370	Luftregelventil / Air Control Valve	32262	VOLKSWAGEN	MULTIVAN T5 (7HM, 7HN, 7HF, 7EF, 7EM, 7EN)	2.0 TDI	09.2009		103	140	1968	4	CCHA	From Chassis No.:	7H-A-200 001
A2C59515370	Luftregelventil / Air Control Valve	32262	VOLKSWAGEN	MULTIVAN T5 (7HM, 7HN, 7HF, 7EF, 7EM, 7EN)	2.0 TDI	09.2009		103	140	1968	4	CAAC	From Chassis No.:	7H-A-200 001
A2C59515370	Luftregelventil / Air Control Valve	32262	VOLKSWAGEN	MULTIVAN T5 (7HM, 7HN, 7HF, 7EF, 7EM, 7EN)	2.0 TDI	09.2009		103	140	1968	4	CCHA	From Chassis No.:	7H-A-200 001
A2C59515370	Luftregelventil / Air Control Valve	32262	VOLKSWAGEN	MULTIVAN T5 (7HM, 7HN, 7HF, 7EF, 7EM, 7EN)	2.0 TDI	09.2009		103	140	1968	4	CAAC	From Chassis No.:	7H-A-200 001
A2C59515370	Luftregelventil / Air Control Valve	32262	VOLKSWAGEN	MULTIVAN T5 (7HM, 7HN, 7HF, 7EF, 7EM, 7EN)	2.0 TDI	09.2009		103	140	1968	4	CCHA	From Chassis No.:	7H-A-200 001
A2C59515370	Luftregelventil / Air Control Valve	32262	VOLKSWAGEN	MULTIVAN T5 (7HM, 7HN, 7HF, 7EF, 7EM, 7EN)	2.0 TDI	09.2009		103	140	1968	4	CAAC	From Chassis No.:	7H-A-200 001
A2C59515370	Luftregelventil / Air Control Valve	32262	VOLKSWAGEN	MULTIVAN T5 (7HM, 7HN, 7HF, 7EF, 7EM, 7EN)	2.0 TDI	09.2009		103	140	1968	4	CCHA	From Chassis No.:	7H-A-200 001
A2C59515370	Luftregelventil / Air Control Valve	32262	VOLKSWAGEN	MULTIVAN T5 (7HM, 7HN, 7HF, 7EF, 7EM, 7EN)	2.0 TDI	09.2009		103	140	1968	4	CAAC	From Chassis No.:	7H-A-200 001
A2C59515370	Luftregelventil / Air Control Valve	32262	VOLKSWAGEN	MULTIVAN T5 (7HM, 7HN, 7HF, 7EF, 7EM, 7EN)	2.0 TDI	09.2009		103	140	1968	4	CCHA	From Chassis No.:	7H-A-200 001
A2C59515370	Luftregelventil / Air Control Valve	32262	VOLKSWAGEN	MULTIVAN T5 (7HM, 7HN, 7HF, 7EF, 7EM, 7EN)	2.0 TDI	09.2009		103	140	1968	4	CAAC	From Chassis No.:	7H-A-200 001
A2C59515370	Luftregelventil / Air Control Valve	32262	VOLKSWAGEN	MULTIVAN T5 (7HM, 7HN, 7HF, 7EF, 7EM, 7EN)	2.0 TDI	09.2009		103	140	1968	4	CCHA	From Chassis No.:	7H-A-200 001
A2C59515370	Luftregelventil / Air Control Valve	32262	VOLKSWAGEN	MULTIVAN T5 (7HM, 7HN, 7HF, 7EF, 7EM, 7EN)	2.0 TDI	09.2009		103	140	1968	4	CAAC	From Chassis No.:	7H-A-200 001
A2C59515370	Luftregelventil / Air Control Valve	32262	VOLKSWAGEN	MULTIVAN T5 (7HM, 7HN, 7HF, 7EF, 7EM, 7EN)	2.0 TDI	09.2009		103	140	1968	4	CCHA	From Chassis No.:	7H-A-200 001
A2C59515370	Luftregelventil / Air Control Valve	3874	VOLKSWAGEN	MULTIVAN T5 (7HM, 7HN, 7HF, 7EF, 7EM, 7EN)	2.0 TDI 4motion	05.2010		100	136	1968	4	CAAE	From Chassis No.:	7H-A-200 001
A2C59515370	Luftregelventil / Air Control Valve	3874	VOLKSWAGEN	MULTIVAN T5 (7HM, 7HN, 7HF, 7EF, 7EM, 7EN)	2.0 TDI 4motion	05.2010		100	136	1968	4	CCHB	From Chassis No.:	7H-A-200 001
A2C59515370	Luftregelventil / Air Control Valve	3874	VOLKSWAGEN	MULTIVAN T5 (7HM, 7HN, 7HF, 7EF, 7EM, 7EN)	2.0 TDI 4motion	05.2010		100	136	1968	4	CAAE	From Chassis No.:	7H-A-200 001
A2C59515370	Luftregelventil / Air Control Valve	3874	VOLKSWAGEN	MULTIVAN T5 (7HM, 7HN, 7HF, 7EF, 7EM, 7EN)	2.0 TDI 4motion	05.2010		100	136	1968	4	CCHB	From Chassis No.:	7H-A-200 001
A2C59515370	Luftregelventil / Air Control Valve	32269	VOLKSWAGEN	MULTIVAN T5 (7HM, 7HN, 7HF, 7EF, 7EM, 7EN)	2.0 TDI 4motion	09.2009		103	140	1968	4	CAAC	From Chassis No.:	7H-A-200 001
A2C59515370	Luftregelventil / Air Control Valve	32269	VOLKSWAGEN	MULTIVAN T5 (7HM, 7HN, 7HF, 7EF, 7EM, 7EN)	2.0 TDI 4motion	09.2009		103	140	1968	4	CCHA	From Chassis No.:	7H-A-200 001
A2C59515370	Luftregelventil / Air Control Valve	32269	VOLKSWAGEN	MULTIVAN T5 (7HM, 7HN, 7HF, 7EF, 7EM, 7EN)	2.0 TDI 4motion	09.2009		103	140	1968	4	CAAC	From Chassis No.:	7H-A-200 001
A2C59515370	Luftregelventil / Air Control Valve	32269	VOLKSWAGEN	MULTIVAN T5 (7HM, 7HN, 7HF, 7EF, 7EM, 7EN)	2.0 TDI 4motion	09.2009		103	140	1968	4	CCHA	From Chassis No.:	7H-A-200 001
A2C59515370	Luftregelventil / Air Control Valve	32269	VOLKSWAGEN	MULTIVAN T5 (7HM, 7HN, 7HF, 7EF, 7EM, 7EN)	2.0 TDI 4motion	09.2009		103	140	1968	4	CAAC	From Chassis No.:	7H-A-200 001
A2C59515370	Luftregelventil / Air Control Valve	32269	VOLKSWAGEN	MULTIVAN T5 (7HM, 7HN, 7HF, 7EF, 7EM, 7EN)	2.0 TDI 4motion	09.2009		103	140	1968	4	CCHA	From Chassis No.:	7H-A-200 001
A2C59515370	Luftregelventil / Air Control Valve	32269	VOLKSWAGEN	MULTIVAN T5 (7HM, 7HN, 7HF, 7EF, 7EM, 7EN)	2.0 TDI 4motion	09.2009		103	140	1968	4	CAAC	From Chassis No.:	7H-A-200 001
A2C59515370	Luftregelventil / Air Control Valve	32269	VOLKSWAGEN	MULTIVAN T5 (7HM, 7HN, 7HF, 7EF, 7EM, 7EN)	2.0 TDI 4motion	09.2009		103	140	1968	4	CCHA	From Chassis No.:	7H-A-200 001
A2C59515370	Luftregelventil / Air Control Valve	32269	VOLKSWAGEN	MULTIVAN T5 (7HM, 7HN, 7HF, 7EF, 7EM, 7EN)	2.0 TDI 4motion	09.2009		103	140	1968	4	CAAC	From Chassis No.:	7H-A-200 001
A2C59515370	Luftregelventil / Air Control Valve	32269	VOLKSWAGEN	MULTIVAN T5 (7HM, 7HN, 7HF, 7EF, 7EM, 7EN)	2.0 TDI 4motion	09.2009		103	140	1968	4	CCHA	From Chassis No.:	7H-A-200 001
A2C59515370	Luftregelventil / Air Control Valve	32274	VOLKSWAGEN	TRANSPORTER T5 Bus (7HB, 7HJ, 7EB, 7EJ, 7EF)	2.0 BiTDI	09.2009		132	180	1968	4	CFCA	From Chassis No.:	7H-A-200 001; 7J-A-200 001
A2C59515370	Luftregelventil / Air Control Valve	32274	VOLKSWAGEN	TRANSPORTER T5 Bus (7HB, 7HJ, 7EB, 7EJ, 7EF)	2.0 BiTDI	09.2009		132	180	1968	4	CFCA	From Chassis No.:	7H-A-200 001; 7J-A-200 001
A2C59515370	Luftregelventil / Air Control Valve	32274	VOLKSWAGEN	TRANSPORTER T5 Bus (7HB, 7HJ, 7EB, 7EJ, 7EF)	2.0 BiTDI	09.2009		132	180	1968	4	CFCA	From Chassis No.:	7H-A-200 001; 7J-A-200 001
A2C59515370	Luftregelventil / Air Control Valve	32274	VOLKSWAGEN	TRANSPORTER T5 Bus (7HB, 7HJ, 7EB, 7EJ, 7EF)	2.0 BiTDI	09.2009		132	180	1968	4	CFCA	From Chassis No.:	7H-A-200 001; 7J-A-200 001
A2C59515370	Luftregelventil / Air Control Valve	32274	VOLKSWAGEN	TRANSPORTER T5 Bus (7HB, 7HJ, 7EB, 7EJ, 7EF)	2.0 BiTDI	09.2009		132	180	1968	4	CFCA	From Chassis No.:	7H-A-200 001; 7J-A-200 001
A2C59515370	Luftregelventil / Air Control Valve	32274	VOLKSWAGEN	TRANSPORTER T5 Bus (7HB, 7HJ, 7EB, 7EJ, 7EF)	2.0 BiTDI	09.2009		132	180	1968	4	CFCA	From Chassis No.:	7H-A-200 001; 7J-A-200 001
A2C59515370	Luftregelventil / Air Control Valve	32277	VOLKSWAGEN	TRANSPORTER T5 Bus (7HB, 7HJ, 7EB, 7EJ, 7EF)	2.0 BiTDI 4motion	09.2009		132	180	1968	4	CFCA	From Chassis No.:	7H-A-200 001; 7J-A-200 001
A2C59515370	Luftregelventil / Air Control Valve	32277	VOLKSWAGEN	TRANSPORTER T5 Bus (7HB, 7HJ, 7EB, 7EJ, 7EF)	2.0 BiTDI 4motion	09.2009		132	180	1968	4	CFCA	From Chassis No.:	7H-A-200 001; 7J-A-200 001
A2C59515370	Luftregelventil / Air Control Valve	32277	VOLKSWAGEN	TRANSPORTER T5 Bus (7HB, 7HJ, 7EB, 7EJ, 7EF)	2.0 BiTDI 4motion	09.2009		132	180	1968	4	CFCA	From Chassis No.:	7H-A-200 001; 7J-A-200 001
A2C59515370	Luftregelventil / Air Control Valve	32277	VOLKSWAGEN	TRANSPORTER T5 Bus (7HB, 7HJ, 7EB, 7EJ, 7EF)	2.0 BiTDI 4motion	09.2009		132	180	1968	4	CFCA	From Chassis No.:	7H-A-200 001; 7J-A-200 001
A2C59515370	Luftregelventil / Air Control Valve	32277	VOLKSWAGEN	TRANSPORTER T5 Bus (7HB, 7HJ, 7EB, 7EJ, 7EF)	2.0 BiTDI 4motion	09.2009		132	180	1968	4	CFCA	From Chassis No.:	7H-A-200 001; 7J-A-200 001
A2C59515370	Luftregelventil / Air Control Valve	32277	VOLKSWAGEN	TRANSPORTER T5 Bus (7HB, 7HJ, 7EB, 7EJ, 7EF)	2.0 BiTDI 4motion	09.2009		132	180	1968	4	CFCA	From Chassis No.:	7H-A-200 001; 7J-A-200 001
A2C59515370	Luftregelventil / Air Control Valve	1661	VOLKSWAGEN	TRANSPORTER T5 Bus (7HB, 7HJ, 7EB, 7EJ, 7EF)	2.0 TDI	05.2010		100	136	1968	4	CAAE	From Chassis No.:	7H-A-200 001; 7J-A-200 001
A2C59515370	Luftregelventil / Air Control Valve	1661	VOLKSWAGEN	TRANSPORTER T5 Bus (7HB, 7HJ, 7EB, 7EJ, 7EF)	2.0 TDI	05.2010		100	136	1968	4	CCHB	From Chassis No.:	7H-A-200 001; 7J-A-200 001
A2C59515370	Luftregelventil / Air Control Valve	1661	VOLKSWAGEN	TRANSPORTER T5 Bus (7HB, 7HJ, 7EB, 7EJ, 7EF)	2.0 TDI	05.2010		100	136	1968	4	CAAE	From Chassis No.:	7H-A-200 001; 7J-A-200 001
A2C59515370	Luftregelventil / Air Control Valve	1661	VOLKSWAGEN	TRANSPORTER T5 Bus (7HB, 7HJ, 7EB, 7EJ, 7EF)	2.0 TDI	05.2010		100	136	1968	4	CCHB	From Chassis No.:	7H-A-200 001; 7J-A-200 001
A2C59515370	Luftregelventil / Air Control Valve	15113	VOLKSWAGEN	TRANSPORTER T5 Bus (7HB, 7HJ, 7EB, 7EJ, 7EF)	2.0 TDI	05.2011		84	114	1968	4	CAAD	From Chassis No.:	7H-C-000 001; 7J-C-000 001

Anhang Applikationen / Addendum Applications

VDO Nr.	Bezeichnung	TecDoc - KtypNr.	Hersteller	Model	Typ	Von Jahr	Bis Jahr	kw	ps	L	Zyl.	Motorcode	Einschränkung1	Einschränkung1 - Wert
VDO No.	Name	TecDoc - Ktypeno.	Manufacturer	Model	Type	Year from	Year to	kw	ps	L	Cyl.	Motorcode	Restriction1	Restriction1 - Value
A2C59515370	Luftregelventil / Air Control Valve	15113	VOLKSWAGEN	TRANSPORTER T5 Bus (7HB, 7HJ, 7EB, 7EJ, 7EF)	2.0 TDI	05.2011		84	114	1968	4	CAAD	From Chassis No.:	7H-C-000 001; 7J-C-000 001
A2C59515370	Luftregelventil / Air Control Valve	15113	VOLKSWAGEN	TRANSPORTER T5 Bus (7HB, 7HJ, 7EB, 7EJ, 7EF)	2.0 TDI	05.2011		84	114	1968	4	CAAD	From Chassis No.:	7H-C-000 001; 7J-C-000 001
A2C59515370	Luftregelventil / Air Control Valve	15113	VOLKSWAGEN	TRANSPORTER T5 Bus (7HB, 7HJ, 7EB, 7EJ, 7EF)	2.0 TDI	05.2011		84	114	1968	4	CAAD	From Chassis No.:	7H-C-000 001; 7J-C-000 001
A2C59515370	Luftregelventil / Air Control Valve	15113	VOLKSWAGEN	TRANSPORTER T5 Bus (7HB, 7HJ, 7EB, 7EJ, 7EF)	2.0 TDI	05.2011		84	114	1968	4	CAAD	From Chassis No.:	7H-C-000 001; 7J-C-000 001
A2C59515370	Luftregelventil / Air Control Valve	15113	VOLKSWAGEN	TRANSPORTER T5 Bus (7HB, 7HJ, 7EB, 7EJ, 7EF)	2.0 TDI	05.2011		84	114	1968	4	CAAD	From Chassis No.:	7H-C-000 001; 7J-C-000 001
A2C59515370	Luftregelventil / Air Control Valve	15113	VOLKSWAGEN	TRANSPORTER T5 Bus (7HB, 7HJ, 7EB, 7EJ, 7EF)	2.0 TDI	05.2011		84	114	1968	4	CAAD	From Chassis No.:	7H-C-000 001; 7J-C-000 001
A2C59515370	Luftregelventil / Air Control Valve	15113	VOLKSWAGEN	TRANSPORTER T5 Bus (7HB, 7HJ, 7EB, 7EJ, 7EF)	2.0 TDI	05.2011		84	114	1968	4	CAAD	From Chassis No.:	7H-C-000 001; 7J-C-000 001
A2C59515370	Luftregelventil / Air Control Valve	15113	VOLKSWAGEN	TRANSPORTER T5 Bus (7HB, 7HJ, 7EB, 7EJ, 7EF)	2.0 TDI	05.2011		84	114	1968	4	CAAD	From Chassis No.:	7H-C-000 001; 7J-C-000 001
A2C59515370	Luftregelventil / Air Control Valve	32255	VOLKSWAGEN	TRANSPORTER T5 Bus (7HB, 7HJ, 7EB, 7EJ, 7EF)	2.0 TDI	09.2009		62	84	1968	4	CAAA	From Chassis No.:	7H-A-200 001; 7J-A-200 001
A2C59515370	Luftregelventil / Air Control Valve	32255	VOLKSWAGEN	TRANSPORTER T5 Bus (7HB, 7HJ, 7EB, 7EJ, 7EF)	2.0 TDI	09.2009		62	84	1968	4	CAAA	From Chassis No.:	7H-A-200 001; 7J-A-200 001
A2C59515370	Luftregelventil / Air Control Valve	32255	VOLKSWAGEN	TRANSPORTER T5 Bus (7HB, 7HJ, 7EB, 7EJ, 7EF)	2.0 TDI	09.2009		62	84	1968	4	CAAA	From Chassis No.:	7H-A-200 001; 7J-A-200 001
A2C59515370	Luftregelventil / Air Control Valve	32255	VOLKSWAGEN	TRANSPORTER T5 Bus (7HB, 7HJ, 7EB, 7EJ, 7EF)	2.0 TDI	09.2009		62	84	1968	4	CAAA	From Chassis No.:	7H-A-200 001; 7J-A-200 001
A2C59515370	Luftregelventil / Air Control Valve	32255	VOLKSWAGEN	TRANSPORTER T5 Bus (7HB, 7HJ, 7EB, 7EJ, 7EF)	2.0 TDI	09.2009		62	84	1968	4	CAAA	From Chassis No.:	7H-A-200 001; 7J-A-200 001
A2C59515370	Luftregelventil / Air Control Valve	32255	VOLKSWAGEN	TRANSPORTER T5 Bus (7HB, 7HJ, 7EB, 7EJ, 7EF)	2.0 TDI	09.2009		62	84	1968	4	CAAA	From Chassis No.:	7H-A-200 001; 7J-A-200 001
A2C59515370	Luftregelventil / Air Control Valve	32255	VOLKSWAGEN	TRANSPORTER T5 Bus (7HB, 7HJ, 7EB, 7EJ, 7EF)	2.0 TDI	09.2009		62	84	1968	4	CAAA	From Chassis No.:	7H-A-200 001; 7J-A-200 001
A2C59515370	Luftregelventil / Air Control Valve	32260	VOLKSWAGEN	TRANSPORTER T5 Bus (7HB, 7HJ, 7EB, 7EJ, 7EF)	2.0 TDI	09.2009		75	102	1968	4	CAAB	From Chassis No.:	7H-A-200 001; 7J-A-200 001
A2C59515370	Luftregelventil / Air Control Valve	32260	VOLKSWAGEN	TRANSPORTER T5 Bus (7HB, 7HJ, 7EB, 7EJ, 7EF)	2.0 TDI	09.2009		75	102	1968	4	CAAB	From Chassis No.:	7H-A-200 001; 7J-A-200 001
A2C59515370	Luftregelventil / Air Control Valve	32260	VOLKSWAGEN	TRANSPORTER T5 Bus (7HB, 7HJ, 7EB, 7EJ, 7EF)	2.0 TDI	09.2009		75	102	1968	4	CAAB	From Chassis No.:	7H-A-200 001; 7J-A-200 001
A2C59515370	Luftregelventil / Air Control Valve	32260	VOLKSWAGEN	TRANSPORTER T5 Bus (7HB, 7HJ, 7EB, 7EJ, 7EF)	2.0 TDI	09.2009		75	102	1968	4	CAAB	From Chassis No.:	7H-A-200 001; 7J-A-200 001
A2C59515370	Luftregelventil / Air Control Valve	32260	VOLKSWAGEN	TRANSPORTER T5 Bus (7HB, 7HJ, 7EB, 7EJ, 7EF)	2.0 TDI	09.2009		75	102	1968	4	CAAB	From Chassis No.:	7H-A-200 001; 7J-A-200 001
A2C59515370	Luftregelventil / Air Control Valve	32260	VOLKSWAGEN	TRANSPORTER T5 Bus (7HB, 7HJ, 7EB, 7EJ, 7EF)	2.0 TDI	09.2009		75	102	1968	4	CAAB	From Chassis No.:	7H-A-200 001; 7J-A-200 001
A2C59515370	Luftregelventil / Air Control Valve	32260	VOLKSWAGEN	TRANSPORTER T5 Bus (7HB, 7HJ, 7EB, 7EJ, 7EF)	2.0 TDI	09.2009		75	102	1968	4	CAAB	From Chassis No.:	7H-A-200 001; 7J-A-200 001
A2C59515370	Luftregelventil / Air Control Valve	32265	VOLKSWAGEN	TRANSPORTER T5 Bus (7HB, 7HJ, 7EB, 7EJ, 7EF)	2.0 TDI	09.2009		103	140	1968	4	CAAC	From Chassis No.:	7H-A-200 001; 7J-A-200 001
A2C59515370	Luftregelventil / Air Control Valve	32265	VOLKSWAGEN	TRANSPORTER T5 Bus (7HB, 7HJ, 7EB, 7EJ, 7EF)	2.0 TDI	09.2009		103	140	1968	4	CCHA	From Chassis No.:	7H-A-200 001; 7J-A-200 001
A2C59515370	Luftregelventil / Air Control Valve	32265	VOLKSWAGEN	TRANSPORTER T5 Bus (7HB, 7HJ, 7EB, 7EJ, 7EF)	2.0 TDI	09.2009		103	140	1968	4	CAAC	From Chassis No.:	7H-A-200 001; 7J-A-200 001
A2C59515370	Luftregelventil / Air Control Valve	32265	VOLKSWAGEN	TRANSPORTER T5 Bus (7HB, 7HJ, 7EB, 7EJ, 7EF)	2.0 TDI	09.2009		103	140	1968	4	CCHA	From Chassis No.:	7H-A-200 001; 7J-A-200 001
A2C59515370	Luftregelventil / Air Control Valve	32265	VOLKSWAGEN	TRANSPORTER T5 Bus (7HB, 7HJ, 7EB, 7EJ, 7EF)	2.0 TDI	09.2009		103	140	1968	4	CAAC	From Chassis No.:	7H-A-200 001; 7J-A-200 001
A2C59515370	Luftregelventil / Air Control Valve	32265	VOLKSWAGEN	TRANSPORTER T5 Bus (7HB, 7HJ, 7EB, 7EJ, 7EF)	2.0 TDI	09.2009		103	140	1968	4	CCHA	From Chassis No.:	7H-A-200 001; 7J-A-200 001
A2C59515370	Luftregelventil / Air Control Valve	32265	VOLKSWAGEN	TRANSPORTER T5 Bus (7HB, 7HJ, 7EB, 7EJ, 7EF)	2.0 TDI	09.2009		103	140	1968	4	CAAC	From Chassis No.:	7H-A-200 001; 7J-A-200 001
A2C59515370	Luftregelventil / Air Control Valve	32265	VOLKSWAGEN	TRANSPORTER T5 Bus (7HB, 7HJ, 7EB, 7EJ, 7EF)	2.0 TDI	09.2009		103	140	1968	4	CCHA	From Chassis No.:	7H-A-200 001; 7J-A-200 001
A2C59515370	Luftregelventil / Air Control Valve	32265	VOLKSWAGEN	TRANSPORTER T5 Bus (7HB, 7HJ, 7EB, 7EJ, 7EF)	2.0 TDI	09.2009		103	140	1968	4	CAAC	From Chassis No.:	7H-A-200 001; 7J-A-200 001
A2C59515370	Luftregelventil / Air Control Valve	32265	VOLKSWAGEN	TRANSPORTER T5 Bus (7HB, 7HJ, 7EB, 7EJ, 7EF)	2.0 TDI	09.2009		103	140	1968	4	CCHA	From Chassis No.:	7H-A-200 001; 7J-A-200 001
A2C59515370	Luftregelventil / Air Control Valve	32265	VOLKSWAGEN	TRANSPORTER T5 Bus (7HB, 7HJ, 7EB, 7EJ, 7EF)	2.0 TDI	09.2009		103	140	1968	4	CAAC	From Chassis No.:	7H-A-200 001; 7J-A-200 001
A2C59515370	Luftregelventil / Air Control Valve	32265	VOLKSWAGEN	TRANSPORTER T5 Bus (7HB, 7HJ, 7EB, 7EJ, 7EF)	2.0 TDI	09.2009		103	140	1968	4	CCHA	From Chassis No.:	7H-A-200 001; 7J-A-200 001
A2C59515370	Luftregelventil / Air Control Valve	1703	VOLKSWAGEN	TRANSPORTER T5 Bus (7HB, 7HJ, 7EB, 7EJ, 7EF)	2.0 TDI 4motion	05.2010		100	136	1968	4	CAAE	From Chassis No.:	7H-A-200 001; 7J-A-200 001
A2C59515370	Luftregelventil / Air Control Valve	1703	VOLKSWAGEN	TRANSPORTER T5 Bus (7HB, 7HJ, 7EB, 7EJ, 7EF)	2.0 TDI 4motion	05.2010		100	136	1968	4	CCHB	From Chassis No.:	7H-A-200 001; 7J-A-200 001
A2C59515370	Luftregelventil / Air Control Valve	1703	VOLKSWAGEN	TRANSPORTER T5 Bus (7HB, 7HJ, 7EB, 7EJ, 7EF)	2.0 TDI 4motion	05.2010		100	136	1968	4	CAAE	From Chassis No.:	7H-A-200 001; 7J-A-200 001
A2C59515370	Luftregelventil / Air Control Valve	1703	VOLKSWAGEN	TRANSPORTER T5 Bus (7HB, 7HJ, 7EB, 7EJ, 7EF)	2.0 TDI 4motion	05.2010		100	136	1968	4	CCHB	From Chassis No.:	7H-A-200 001; 7J-A-200 001
A2C59515370	Luftregelventil / Air Control Valve	32266	VOLKSWAGEN	TRANSPORTER T5 Bus (7HB, 7HJ, 7EB, 7EJ, 7EF)	2.0 TDI 4motion	09.2009		103	140	1968	4	CAAC	From Chassis No.:	7H-A-200 001; 7J-A-200 001
A2C59515370	Luftregelventil / Air Control Valve	32266	VOLKSWAGEN	TRANSPORTER T5 Bus (7HB, 7HJ, 7EB, 7EJ, 7EF)	2.0 TDI 4motion	09.2009		103	140	1968	4	CCHA	From Chassis No.:	7H-A-200 001; 7J-A-200 001
A2C59515370	Luftregelventil / Air Control Valve	32266	VOLKSWAGEN	TRANSPORTER T5 Bus (7HB, 7HJ, 7EB, 7EJ, 7EF)	2.0 TDI 4motion	09.2009		103	140	1968	4	CAAC	From Chassis No.:	7H-A-200 001; 7J-A-200 001
A2C59515370	Luftregelventil / Air Control Valve	32266	VOLKSWAGEN	TRANSPORTER T5 Bus (7HB, 7HJ, 7EB, 7EJ, 7EF)	2.0 TDI 4motion	09.2009		103	140	1968	4	CCHA	From Chassis No.:	7H-A-200 001; 7J-A-200 001
A2C59515370	Luftregelventil / Air Control Valve	32266	VOLKSWAGEN	TRANSPORTER T5 Bus (7HB, 7HJ, 7EB, 7EJ, 7EF)	2.0 TDI 4motion	09.2009		103	140	1968	4	CAAC	From Chassis No.:	7H-A-200 001; 7J-A-200 001
A2C59515370	Luftregelventil / Air Control Valve	32266	VOLKSWAGEN	TRANSPORTER T5 Bus (7HB, 7HJ, 7EB, 7EJ, 7EF)	2.0 TDI 4motion	09.2009		103	140	1968	4	CCHA	From Chassis No.:	7H-A-200 001; 7J-A-200 001
A2C59515370	Luftregelventil / Air Control Valve	32266	VOLKSWAGEN	TRANSPORTER T5 Bus (7HB, 7HJ, 7EB, 7EJ, 7EF)	2.0 TDI 4motion	09.2009		103	140	1968	4	CAAC	From Chassis No.:	7H-A-200 001; 7J-A-200 001
A2C59515370	Luftregelventil / Air Control Valve	32266	VOLKSWAGEN	TRANSPORTER T5 Bus (7HB, 7HJ, 7EB, 7EJ, 7EF)	2.0 TDI 4motion	09.2009		103	140	1968	4	CCHA	From Chassis No.:	7H-A-200 001; 7J-A-200 001
A2C59515370	Luftregelventil / Air Control Valve	32266	VOLKSWAGEN	TRANSPORTER T5 Bus (7HB, 7HJ, 7EB, 7EJ, 7EF)	2.0 TDI 4motion	09.2009		103	140	1968	4	CAAC	From Chassis No.:	7H-A-200 001; 7J-A-200 001
A2C59515370	Luftregelventil / Air Control Valve	32266	VOLKSWAGEN	TRANSPORTER T5 Bus (7HB, 7HJ, 7EB, 7EJ, 7EF)	2.0 TDI 4motion	09.2009		103	140	1968	4	CCHA	From Chassis No.:	7H-A-200 001; 7J-A-200 001
A2C59515370	Luftregelventil / Air Control Valve	32266	VOLKSWAGEN	TRANSPORTER T5 Bus (7HB, 7HJ, 7EB, 7EJ, 7EF)	2.0 TDI 4motion	09.2009		103	140	1968	4	CAAC	From Chassis No.:	7H-A-200 001; 7J-A-200 001
A2C59515370	Luftregelventil / Air Control Valve	32266	VOLKSWAGEN	TRANSPORTER T5 Bus (7HB, 7HJ, 7EB, 7EJ, 7EF)	2.0 TDI 4motion	09.2009		103	140	1968	4	CCHA	From Chassis No.:	7H-A-200 001; 7J-A-200 001
A2C59515370	Luftregelventil / Air Control Valve	32273	VOLKSWAGEN	TRANSPORTER T5 Kasten (7HA, 7HH, 7EA, 7EH)	2.0 BiTDI	09.2009		132	180	1968	4	CFCA	From Chassis No.:	7H-A-200 001; 7J-A-200 001
A2C59515370	Luftregelventil / Air Control Valve	32273	VOLKSWAGEN	TRANSPORTER T5 Kasten (7HA, 7HH, 7EA, 7EH)	2.0 BiTDI	09.2009		132	180	1968	4	CFCA	From Chassis No.:	7H-A-200 001; 7J-A-200 001
A2C59515370	Luftregelventil / Air Control Valve	32273	VOLKSWAGEN	TRANSPORTER T5 Kasten (7HA, 7HH, 7EA, 7EH)	2.0 BiTDI	09.2009		132	180	1968	4	CFCA	From Chassis No.:	7H-A-200 001; 7J-A-200 001
A2C59515370	Luftregelventil / Air Control Valve	32273	VOLKSWAGEN	TRANSPORTER T5 Kasten (7HA, 7HH, 7EA, 7EH)	2.0 BiTDI	09.2009		132	180	1968	4	CFCA	From Chassis No.:	7H-A-200 001; 7J-A-200 001
A2C59515370	Luftregelventil / Air Control Valve	32273	VOLKSWAGEN	TRANSPORTER T5 Kasten (7HA, 7HH, 7EA, 7EH)	2.0 BiTDI	09.2009		132	180	1968	4	CFCA	From Chassis No.:	7H-A-200 001; 7J-A-200 001
A2C59515370	Luftregelventil / Air Control Valve	32273	VOLKSWAGEN	TRANSPORTER T5 Kasten (7HA, 7HH, 7EA, 7EH)	2.0 BiTDI	09.2009		132	180	1968	4	CFCA	From Chassis No.:	7H-A-200 001; 7J-A-200 001
A2C59515370	Luftregelventil / Air Control Valve	32276	VOLKSWAGEN	TRANSPORTER T5 Kasten (7HA, 7HH, 7EA, 7EH)	2.0 BiTDI 4motion	09.2009		132	180	1968	4	CFCA	From Chassis No.:	7H-A-200 001; 7J-A-200 001
A2C59515370	Luftregelventil / Air Control Valve	32276	VOLKSWAGEN	TRANSPORTER T5 Kasten (7HA, 7HH, 7EA, 7EH)	2.0 BiTDI 4motion	09.2009		132	180	1968	4	CFCA	From Chassis No.:	7H-A-200 001; 7J-A-200 001
A2C59515370	Luftregelventil / Air Control Valve	32276	VOLKSWAGEN	TRANSPORTER T5 Kasten (7HA, 7HH, 7EA, 7EH)	2.0 BiTDI 4motion	09.2009		132	180	1968	4	CFCA	From Chassis No.:	7H-A-200 001; 7J-A-200 001
A2C59515370	Luftregelventil / Air Control Valve	32276	VOLKSWAGEN	TRANSPORTER T5 Kasten (7HA, 7HH, 7EA, 7EH)	2.0 BiTDI 4motion	09.2009		132	180	1968	4	CFCA	From Chassis No.:	7H-A-200 001; 7J-A-200 001
A2C59515370	Luftregelventil / Air Control Valve	32276	VOLKSWAGEN	TRANSPORTER T5 Kasten (7HA, 7HH, 7EA, 7EH)	2.0 BiTDI 4motion	09.2009		132	180	1968	4	CFCA	From Chassis No.:	7H-A-200 001; 7J-A-200 001

Anhang Applikationen / Addendum Applications

VDO Nr.	Bezeichnung	TecDoc - KtypNr.	Hersteller	Model	Typ	Von Jahr	Bis Jahr	kw	ps	L	Zyl.	Motorcode	Einschränkung1	Einschränkung1 - Wert
VDO No.	Name	TecDoc - Ktypeno.	Manufacturer	Model	Type	Year from	Year to	kw	ps	L	Cyl.	Motorcode	Restriction1	Restriction1 - Value
A2C59515370	Luftregelventil / Air Control Valve	24375	VOLKSWAGEN	TRANSPORTER T5 Kasten (7HA, 7HH, 7EA, 7EH)	2.0 TDI	05.2011		84	114	1968	4	CAAD	From Chassis No.:	7H-C-000 001; 7J-C-000 001
A2C59515370	Luftregelventil / Air Control Valve	24375	VOLKSWAGEN	TRANSPORTER T5 Kasten (7HA, 7HH, 7EA, 7EH)	2.0 TDI	05.2011		84	114	1968	4	CAAD	From Chassis No.:	7H-C-000 001; 7J-C-000 001
A2C59515370	Luftregelventil / Air Control Valve	24375	VOLKSWAGEN	TRANSPORTER T5 Kasten (7HA, 7HH, 7EA, 7EH)	2.0 TDI	05.2011		84	114	1968	4	CAAD	From Chassis No.:	7H-C-000 001; 7J-C-000 001
A2C59515370	Luftregelventil / Air Control Valve	24375	VOLKSWAGEN	TRANSPORTER T5 Kasten (7HA, 7HH, 7EA, 7EH)	2.0 TDI	05.2011		84	114	1968	4	CAAD	From Chassis No.:	7H-C-000 001; 7J-C-000 001
A2C59515370	Luftregelventil / Air Control Valve	24375	VOLKSWAGEN	TRANSPORTER T5 Kasten (7HA, 7HH, 7EA, 7EH)	2.0 TDI	05.2011		84	114	1968	4	CAAD	From Chassis No.:	7H-C-000 001; 7J-C-000 001
A2C59515370	Luftregelventil / Air Control Valve	24375	VOLKSWAGEN	TRANSPORTER T5 Kasten (7HA, 7HH, 7EA, 7EH)	2.0 TDI	05.2011		84	114	1968	4	CAAD	From Chassis No.:	7H-C-000 001; 7J-C-000 001
A2C59515370	Luftregelventil / Air Control Valve	24375	VOLKSWAGEN	TRANSPORTER T5 Kasten (7HA, 7HH, 7EA, 7EH)	2.0 TDI	05.2011		84	114	1968	4	CAAD	From Chassis No.:	7H-C-000 001; 7J-C-000 001
A2C59515370	Luftregelventil / Air Control Valve	24375	VOLKSWAGEN	TRANSPORTER T5 Kasten (7HA, 7HH, 7EA, 7EH)	2.0 TDI	05.2011		84	114	1968	4	CAAD	From Chassis No.:	7H-C-000 001; 7J-C-000 001
A2C59515370	Luftregelventil / Air Control Valve	27769	VOLKSWAGEN	TRANSPORTER T5 Kasten (7HA, 7HH, 7EA, 7EH)	2.0 TDI	05.2010		100	136	1968	4	CAAE	From Chassis No.:	7H-A-200 001; 7J-A-200 001
A2C59515370	Luftregelventil / Air Control Valve	27769	VOLKSWAGEN	TRANSPORTER T5 Kasten (7HA, 7HH, 7EA, 7EH)	2.0 TDI	05.2010		100	136	1968	4	CCHB	From Chassis No.:	7H-A-200 001; 7J-A-200 001
A2C59515370	Luftregelventil / Air Control Valve	27769	VOLKSWAGEN	TRANSPORTER T5 Kasten (7HA, 7HH, 7EA, 7EH)	2.0 TDI	05.2010		100	136	1968	4	CAAE	From Chassis No.:	7H-A-200 001; 7J-A-200 001
A2C59515370	Luftregelventil / Air Control Valve	27769	VOLKSWAGEN	TRANSPORTER T5 Kasten (7HA, 7HH, 7EA, 7EH)	2.0 TDI	05.2010		100	136	1968	4	CCHB	From Chassis No.:	7H-A-200 001; 7J-A-200 001
A2C59515370	Luftregelventil / Air Control Valve	27769	VOLKSWAGEN	TRANSPORTER T5 Kasten (7HA, 7HH, 7EA, 7EH)	2.0 TDI	05.2010		100	136	1968	4	CAAE	From Chassis No.:	7H-A-200 001; 7J-A-200 001
A2C59515370	Luftregelventil / Air Control Valve	27769	VOLKSWAGEN	TRANSPORTER T5 Kasten (7HA, 7HH, 7EA, 7EH)	2.0 TDI	05.2010		100	136	1968	4	CCHB	From Chassis No.:	7H-A-200 001; 7J-A-200 001
A2C59515370	Luftregelventil / Air Control Valve	27769	VOLKSWAGEN	TRANSPORTER T5 Kasten (7HA, 7HH, 7EA, 7EH)	2.0 TDI	05.2010		100	136	1968	4	CAAE	From Chassis No.:	7H-A-200 001; 7J-A-200 001
A2C59515370	Luftregelventil / Air Control Valve	27769	VOLKSWAGEN	TRANSPORTER T5 Kasten (7HA, 7HH, 7EA, 7EH)	2.0 TDI	05.2010		100	136	1968	4	CCHB	From Chassis No.:	7H-A-200 001; 7J-A-200 001
A2C59515370	Luftregelventil / Air Control Valve	27769	VOLKSWAGEN	TRANSPORTER T5 Kasten (7HA, 7HH, 7EA, 7EH)	2.0 TDI	05.2010		100	136	1968	4	CAAE	From Chassis No.:	7H-A-200 001; 7J-A-200 001
A2C59515370	Luftregelventil / Air Control Valve	27769	VOLKSWAGEN	TRANSPORTER T5 Kasten (7HA, 7HH, 7EA, 7EH)	2.0 TDI	05.2010		100	136	1968	4	CCHB	From Chassis No.:	7H-A-200 001; 7J-A-200 001
A2C59515370	Luftregelventil / Air Control Valve	27769	VOLKSWAGEN	TRANSPORTER T5 Kasten (7HA, 7HH, 7EA, 7EH)	2.0 TDI	05.2010		100	136	1968	4	CAAE	From Chassis No.:	7H-A-200 001; 7J-A-200 001
A2C59515370	Luftregelventil / Air Control Valve	27769	VOLKSWAGEN	TRANSPORTER T5 Kasten (7HA, 7HH, 7EA, 7EH)	2.0 TDI	05.2010		100	136	1968	4	CCHB	From Chassis No.:	7H-A-200 001; 7J-A-200 001
A2C59515370	Luftregelventil / Air Control Valve	27769	VOLKSWAGEN	TRANSPORTER T5 Kasten (7HA, 7HH, 7EA, 7EH)	2.0 TDI	05.2010		100	136	1968	4	CAAE	From Chassis No.:	7H-A-200 001; 7J-A-200 001
A2C59515370	Luftregelventil / Air Control Valve	27769	VOLKSWAGEN	TRANSPORTER T5 Kasten (7HA, 7HH, 7EA, 7EH)	2.0 TDI	05.2010		100	136	1968	4	CCHB	From Chassis No.:	7H-A-200 001; 7J-A-200 001
A2C59515370	Luftregelventil / Air Control Valve	27769	VOLKSWAGEN	TRANSPORTER T5 Kasten (7HA, 7HH, 7EA, 7EH)	2.0 TDI	05.2010		100	136	1968	4	CAAE	From Chassis No.:	7H-A-200 001; 7J-A-200 001
A2C59515370	Luftregelventil / Air Control Valve	27769	VOLKSWAGEN	TRANSPORTER T5 Kasten (7HA, 7HH, 7EA, 7EH)	2.0 TDI	05.2010		100	136	1968	4	CCHB	From Chassis No.:	7H-A-200 001; 7J-A-200 001
A2C59515370	Luftregelventil / Air Control Valve	32256	VOLKSWAGEN	TRANSPORTER T5 Kasten (7HA, 7HH, 7EA, 7EH)	2.0 TDI	09.2009		62	84	1968	4	CAAA	From Chassis No.:	7H-A-200 001; 7J-A-200 001
A2C59515370	Luftregelventil / Air Control Valve	32256	VOLKSWAGEN	TRANSPORTER T5 Kasten (7HA, 7HH, 7EA, 7EH)	2.0 TDI	09.2009		62	84	1968	4	CAAA	From Chassis No.:	7H-A-200 001; 7J-A-200 001
A2C59515370	Luftregelventil / Air Control Valve	32256	VOLKSWAGEN	TRANSPORTER T5 Kasten (7HA, 7HH, 7EA, 7EH)	2.0 TDI	09.2009		62	84	1968	4	CAAA	From Chassis No.:	7H-A-200 001; 7J-A-200 001
A2C59515370	Luftregelventil / Air Control Valve	32256	VOLKSWAGEN	TRANSPORTER T5 Kasten (7HA, 7HH, 7EA, 7EH)	2.0 TDI	09.2009		62	84	1968	4	CAAA	From Chassis No.:	7H-A-200 001; 7J-A-200 001
A2C59515370	Luftregelventil / Air Control Valve	32256	VOLKSWAGEN	TRANSPORTER T5 Kasten (7HA, 7HH, 7EA, 7EH)	2.0 TDI	09.2009		62	84	1968	4	CAAA	From Chassis No.:	7H-A-200 001; 7J-A-200 001
A2C59515370	Luftregelventil / Air Control Valve	32256	VOLKSWAGEN	TRANSPORTER T5 Kasten (7HA, 7HH, 7EA, 7EH)	2.0 TDI	09.2009		62	84	1968	4	CAAA	From Chassis No.:	7H-A-200 001; 7J-A-200 001
A2C59515370	Luftregelventil / Air Control Valve	32256	VOLKSWAGEN	TRANSPORTER T5 Kasten (7HA, 7HH, 7EA, 7EH)	2.0 TDI	09.2009		62	84	1968	4	CAAA	From Chassis No.:	7H-A-200 001; 7J-A-200 001
A2C59515370	Luftregelventil / Air Control Valve	32259	VOLKSWAGEN	TRANSPORTER T5 Kasten (7HA, 7HH, 7EA, 7EH)	2.0 TDI	09.2009		75	102	1968	4	CAAB	From Chassis No.:	7H-A-200 001; 7J-A-200 001
A2C59515370	Luftregelventil / Air Control Valve	32259	VOLKSWAGEN	TRANSPORTER T5 Kasten (7HA, 7HH, 7EA, 7EH)	2.0 TDI	09.2009		75	102	1968	4	CAAB	From Chassis No.:	7H-A-200 001; 7J-A-200 001
A2C59515370	Luftregelventil / Air Control Valve	32259	VOLKSWAGEN	TRANSPORTER T5 Kasten (7HA, 7HH, 7EA, 7EH)	2.0 TDI	09.2009		75	102	1968	4	CAAB	From Chassis No.:	7H-A-200 001; 7J-A-200 001
A2C59515370	Luftregelventil / Air Control Valve	32259	VOLKSWAGEN	TRANSPORTER T5 Kasten (7HA, 7HH, 7EA, 7EH)	2.0 TDI	09.2009		75	102	1968	4	CAAB	From Chassis No.:	7H-A-200 001; 7J-A-200 001
A2C59515370	Luftregelventil / Air Control Valve	32259	VOLKSWAGEN	TRANSPORTER T5 Kasten (7HA, 7HH, 7EA, 7EH)	2.0 TDI	09.2009		75	102	1968	4	CAAB	From Chassis No.:	7H-A-200 001; 7J-A-200 001
A2C59515370	Luftregelventil / Air Control Valve	32259	VOLKSWAGEN	TRANSPORTER T5 Kasten (7HA, 7HH, 7EA, 7EH)	2.0 TDI	09.2009		75	102	1968	4	CAAB	From Chassis No.:	7H-A-200 001; 7J-A-200 001
A2C59515370	Luftregelventil / Air Control Valve	32264	VOLKSWAGEN	TRANSPORTER T5 Kasten (7HA, 7HH, 7EA, 7EH)	2.0 TDI	09.2009		103	140	1968	4	CAAC	From Chassis No.:	7H-A-200 001; 7J-A-200 001
A2C59515370	Luftregelventil / Air Control Valve	32264	VOLKSWAGEN	TRANSPORTER T5 Kasten (7HA, 7HH, 7EA, 7EH)	2.0 TDI	09.2009		103	140	1968	4	CCHA	From Chassis No.:	7H-A-200 001; 7J-A-200 001
A2C59515370	Luftregelventil / Air Control Valve	32264	VOLKSWAGEN	TRANSPORTER T5 Kasten (7HA, 7HH, 7EA, 7EH)	2.0 TDI	09.2009		103	140	1968	4	CAAC	From Chassis No.:	7H-A-200 001; 7J-A-200 001
A2C59515370	Luftregelventil / Air Control Valve	32264	VOLKSWAGEN	TRANSPORTER T5 Kasten (7HA, 7HH, 7EA, 7EH)	2.0 TDI	09.2009		103	140	1968	4	CCHA	From Chassis No.:	7H-A-200 001; 7J-A-200 001
A2C59515370	Luftregelventil / Air Control Valve	32264	VOLKSWAGEN	TRANSPORTER T5 Kasten (7HA, 7HH, 7EA, 7EH)	2.0 TDI	09.2009		103	140	1968	4	CAAC	From Chassis No.:	7H-A-200 001; 7J-A-200 001
A2C59515370	Luftregelventil / Air Control Valve	32264	VOLKSWAGEN	TRANSPORTER T5 Kasten (7HA, 7HH, 7EA, 7EH)	2.0 TDI	09.2009		103	140	1968	4	CCHA	From Chassis No.:	7H-A-200 001; 7J-A-200 001
A2C59515370	Luftregelventil / Air Control Valve	32264	VOLKSWAGEN	TRANSPORTER T5 Kasten (7HA, 7HH, 7EA, 7EH)	2.0 TDI	09.2009		103	140	1968	4	CAAC	From Chassis No.:	7H-A-200 001; 7J-A-200 001
A2C59515370	Luftregelventil / Air Control Valve	32264	VOLKSWAGEN	TRANSPORTER T5 Kasten (7HA, 7HH, 7EA, 7EH)	2.0 TDI	09.2009		103	140	1968	4	CCHA	From Chassis No.:	7H-A-200 001; 7J-A-200 001
A2C59515370	Luftregelventil / Air Control Valve	32264	VOLKSWAGEN	TRANSPORTER T5 Kasten (7HA, 7HH, 7EA, 7EH)	2.0 TDI	09.2009		103	140	1968	4	CAAC	From Chassis No.:	7H-A-200 001; 7J-A-200 001
A2C59515370	Luftregelventil / Air Control Valve	32264	VOLKSWAGEN	TRANSPORTER T5 Kasten (7HA, 7HH, 7EA, 7EH)	2.0 TDI	09.2009		103	140	1968	4	CCHA	From Chassis No.:	7H-A-200 001; 7J-A-200 001
A2C59515370	Luftregelventil / Air Control Valve	27774	VOLKSWAGEN	TRANSPORTER T5 Kasten (7HA, 7HH, 7EA, 7EH)	2.0 TDI 4motion	05.2010		100	136	1968	4	CAAE	From Chassis No.:	7H-A-200 001; 7J-A-200 001
A2C59515370	Luftregelventil / Air Control Valve	27774	VOLKSWAGEN	TRANSPORTER T5 Kasten (7HA, 7HH, 7EA, 7EH)	2.0 TDI 4motion	05.2010		100	136	1968	4	CCHB	From Chassis No.:	7H-A-200 001; 7J-A-200 001
A2C59515370	Luftregelventil / Air Control Valve	27774	VOLKSWAGEN	TRANSPORTER T5 Kasten (7HA, 7HH, 7EA, 7EH)	2.0 TDI 4motion	05.2010		100	136	1968	4	CAAE	From Chassis No.:	7H-A-200 001; 7J-A-200 001
A2C59515370	Luftregelventil / Air Control Valve	27774	VOLKSWAGEN	TRANSPORTER T5 Kasten (7HA, 7HH, 7EA, 7EH)	2.0 TDI 4motion	05.2010		100	136	1968	4	CCHB	From Chassis No.:	7H-A-200 001; 7J-A-200 001
A2C59515370	Luftregelventil / Air Control Valve	27774	VOLKSWAGEN	TRANSPORTER T5 Kasten (7HA, 7HH, 7EA, 7EH)	2.0 TDI 4motion	05.2010		100	136	1968	4	CAAE	From Chassis No.:	7H-A-200 001; 7J-A-200 001
A2C59515370	Luftregelventil / Air Control Valve	27774	VOLKSWAGEN	TRANSPORTER T5 Kasten (7HA, 7HH, 7EA, 7EH)	2.0 TDI 4motion	05.2010		100	136	1968	4	CCHB	From Chassis No.:	7H-A-200 001; 7J-A-200 001
A2C59515370	Luftregelventil / Air Control Valve	27774	VOLKSWAGEN	TRANSPORTER T5 Kasten (7HA, 7HH, 7EA, 7EH)	2.0 TDI 4motion	05.2010		100	136	1968	4	CAAE	From Chassis No.:	7H-A-200 001; 7J-A-200 001
A2C59515370	Luftregelventil / Air Control Valve	27774	VOLKSWAGEN	TRANSPORTER T5 Kasten (7HA, 7HH, 7EA, 7EH)	2.0 TDI 4motion	05.2010		100	136	1968	4	CCHB	From Chassis No.:	7H-A-200 001; 7J-A-200 001
A2C59515370	Luftregelventil / Air Control Valve	27774	VOLKSWAGEN	TRANSPORTER T5 Kasten (7HA, 7HH, 7EA, 7EH)	2.0 TDI 4motion	05.2010		100	136	1968	4	CAAE	From Chassis No.:	7H-A-200 001; 7J-A-200 001
A2C59515370	Luftregelventil / Air Control Valve	27774	VOLKSWAGEN	TRANSPORTER T5 Kasten (7HA, 7HH, 7EA, 7EH)	2.0 TDI 4motion	05.2010		100	136	1968	4	CCHB	From Chassis No.:	7H-A-200 001; 7J-A-200 001
A2C59515370	Luftregelventil / Air Control Valve	27774	VOLKSWAGEN	TRANSPORTER T5 Kasten (7HA, 7HH, 7EA, 7EH)	2.0 TDI 4motion	05.2010		100	136	1968	4	CAAE	From Chassis No.:	7H-A-200 001; 7J-A-200 001
A2C59515370	Luftregelventil / Air Control Valve	27774	VOLKSWAGEN	TRANSPORTER T5 Kasten (7HA, 7HH, 7EA, 7EH)	2.0 TDI 4motion	05.2010		100	136	1968	4	CCHB	From Chassis No.:	7H-A-200 001; 7J-A-200 001

Anhang Applikationen / Addendum Applications

VDO Nr.	Bezeichnung	TecDoc - KtypNr.	Hersteller	Model	Typ	Von Jahr	Bis Jahr	kw	ps	L	Zyl.	Motorcode	Einschränkung1	Einschränkung1 - Wert
VDO No.	Name	TecDoc - Ktypeno.	Manufacturer	Model	Type	Year from	Year to	kw	ps	L	Cyl.	Motorcode	Restriction1	Restriction1 - Value
A2C59515370	Luftregelventil / Air Control Valve	27774	VOLKSWAGEN	TRANSPORTER T5 Kasten (7HA, 7HH, 7EA, 7EH)	2.0 TDI 4motion	05.2010		100	136	1968	4	CAAE	From Chassis No.:	7H-A-200 001; 7J-A-200 001
A2C59515370	Luftregelventil / Air Control Valve	27774	VOLKSWAGEN	TRANSPORTER T5 Kasten (7HA, 7HH, 7EA, 7EH)	2.0 TDI 4motion	05.2010		100	136	1968	4	CCHB	From Chassis No.:	7H-A-200 001; 7J-A-200 001
A2C59515370	Luftregelventil / Air Control Valve	27774	VOLKSWAGEN	TRANSPORTER T5 Kasten (7HA, 7HH, 7EA, 7EH)	2.0 TDI 4motion	05.2010		100	136	1968	4	CAAE	From Chassis No.:	7H-A-200 001; 7J-A-200 001
A2C59515370	Luftregelventil / Air Control Valve	27774	VOLKSWAGEN	TRANSPORTER T5 Kasten (7HA, 7HH, 7EA, 7EH)	2.0 TDI 4motion	05.2010		100	136	1968	4	CCHB	From Chassis No.:	7H-A-200 001; 7J-A-200 001
A2C59515370	Luftregelventil / Air Control Valve	32267	VOLKSWAGEN	TRANSPORTER T5 Kasten (7HA, 7HH, 7EA, 7EH)	2.0 TDI 4motion	09.2009		103	140	1968	4	CAAC	From Chassis No.:	7H-A-200 001; 7J-A-200 001
A2C59515370	Luftregelventil / Air Control Valve	32267	VOLKSWAGEN	TRANSPORTER T5 Kasten (7HA, 7HH, 7EA, 7EH)	2.0 TDI 4motion	09.2009		103	140	1968	4	CCHA	From Chassis No.:	7H-A-200 001; 7J-A-200 001
A2C59515370	Luftregelventil / Air Control Valve	32267	VOLKSWAGEN	TRANSPORTER T5 Kasten (7HA, 7HH, 7EA, 7EH)	2.0 TDI 4motion	09.2009		103	140	1968	4	CAAC	From Chassis No.:	7H-A-200 001; 7J-A-200 001
A2C59515370	Luftregelventil / Air Control Valve	32267	VOLKSWAGEN	TRANSPORTER T5 Kasten (7HA, 7HH, 7EA, 7EH)	2.0 TDI 4motion	09.2009		103	140	1968	4	CCHA	From Chassis No.:	7H-A-200 001; 7J-A-200 001
A2C59515370	Luftregelventil / Air Control Valve	32267	VOLKSWAGEN	TRANSPORTER T5 Kasten (7HA, 7HH, 7EA, 7EH)	2.0 TDI 4motion	09.2009		103	140	1968	4	CAAC	From Chassis No.:	7H-A-200 001; 7J-A-200 001
A2C59515370	Luftregelventil / Air Control Valve	32267	VOLKSWAGEN	TRANSPORTER T5 Kasten (7HA, 7HH, 7EA, 7EH)	2.0 TDI 4motion	09.2009		103	140	1968	4	CCHA	From Chassis No.:	7H-A-200 001; 7J-A-200 001
A2C59515370	Luftregelventil / Air Control Valve	32267	VOLKSWAGEN	TRANSPORTER T5 Kasten (7HA, 7HH, 7EA, 7EH)	2.0 TDI 4motion	09.2009		103	140	1968	4	CAAC	From Chassis No.:	7H-A-200 001; 7J-A-200 001
A2C59515370	Luftregelventil / Air Control Valve	32267	VOLKSWAGEN	TRANSPORTER T5 Kasten (7HA, 7HH, 7EA, 7EH)	2.0 TDI 4motion	09.2009		103	140	1968	4	CCHA	From Chassis No.:	7H-A-200 001; 7J-A-200 001
A2C59515370	Luftregelventil / Air Control Valve	32267	VOLKSWAGEN	TRANSPORTER T5 Kasten (7HA, 7HH, 7EA, 7EH)	2.0 TDI 4motion	09.2009		103	140	1968	4	CAAC	From Chassis No.:	7H-A-200 001; 7J-A-200 001
A2C59515370	Luftregelventil / Air Control Valve	32267	VOLKSWAGEN	TRANSPORTER T5 Kasten (7HA, 7HH, 7EA, 7EH)	2.0 TDI 4motion	09.2009		103	140	1968	4	CCHA	From Chassis No.:	7H-A-200 001; 7J-A-200 001
A2C59515370	Luftregelventil / Air Control Valve	32267	VOLKSWAGEN	TRANSPORTER T5 Kasten (7HA, 7HH, 7EA, 7EH)	2.0 TDI 4motion	09.2009		103	140	1968	4	CAAC	From Chassis No.:	7H-A-200 001; 7J-A-200 001
A2C59515370	Luftregelventil / Air Control Valve	32267	VOLKSWAGEN	TRANSPORTER T5 Kasten (7HA, 7HH, 7EA, 7EH)	2.0 TDI 4motion	09.2009		103	140	1968	4	CCHA	From Chassis No.:	7H-A-200 001; 7J-A-200 001
A2C59515370	Luftregelventil / Air Control Valve	32272	VOLKSWAGEN	TRANSPORTER T5 Pritsche/Fahrgestell (7JD, 7JE, 7JL, 7JY, 7JZ	2.0 BiTDI	09.2009		132	180	1968	4	CFCA	From Chassis No.:	7H-A-200 001; 7J-A-200 001
A2C59515370	Luftregelventil / Air Control Valve	32272	VOLKSWAGEN	TRANSPORTER T5 Pritsche/Fahrgestell (7JD, 7JE, 7JL, 7JY, 7JZ	2.0 BiTDI	09.2009		132	180	1968	4	CFCA	From Chassis No.:	7H-A-200 001; 7J-A-200 001
A2C59515370	Luftregelventil / Air Control Valve	32272	VOLKSWAGEN	TRANSPORTER T5 Pritsche/Fahrgestell (7JD, 7JE, 7JL, 7JY, 7JZ	2.0 BiTDI	09.2009		132	180	1968	4	CFCA	From Chassis No.:	7H-A-200 001; 7J-A-200 001
A2C59515370	Luftregelventil / Air Control Valve	32272	VOLKSWAGEN	TRANSPORTER T5 Pritsche/Fahrgestell (7JD, 7JE, 7JL, 7JY, 7JZ	2.0 BiTDI	09.2009		132	180	1968	4	CFCA	From Chassis No.:	7H-A-200 001; 7J-A-200 001
A2C59515370	Luftregelventil / Air Control Valve	32272	VOLKSWAGEN	TRANSPORTER T5 Pritsche/Fahrgestell (7JD, 7JE, 7JL, 7JY, 7JZ	2.0 BiTDI	09.2009		132	180	1968	4	CFCA	From Chassis No.:	7H-A-200 001; 7J-A-200 001
A2C59515370	Luftregelventil / Air Control Valve	32272	VOLKSWAGEN	TRANSPORTER T5 Pritsche/Fahrgestell (7JD, 7JE, 7JL, 7JY, 7JZ	2.0 BiTDI	09.2009		132	180	1968	4	CFCA	From Chassis No.:	7H-A-200 001; 7J-A-200 001
A2C59515370	Luftregelventil / Air Control Valve	32275	VOLKSWAGEN	TRANSPORTER T5 Pritsche/Fahrgestell (7JD, 7JE, 7JL, 7JY, 7JZ	2.0 BiTDI 4motion	09.2009		132	180	1968	4	CFCA	From Chassis No.:	7H-A-200 001; 7J-A-200 001
A2C59515370	Luftregelventil / Air Control Valve	32275	VOLKSWAGEN	TRANSPORTER T5 Pritsche/Fahrgestell (7JD, 7JE, 7JL, 7JY, 7JZ	2.0 BiTDI 4motion	09.2009		132	180	1968	4	CFCA	From Chassis No.:	7H-A-200 001; 7J-A-200 001
A2C59515370	Luftregelventil / Air Control Valve	32275	VOLKSWAGEN	TRANSPORTER T5 Pritsche/Fahrgestell (7JD, 7JE, 7JL, 7JY, 7JZ	2.0 BiTDI 4motion	09.2009		132	180	1968	4	CFCA	From Chassis No.:	7H-A-200 001; 7J-A-200 001
A2C59515370	Luftregelventil / Air Control Valve	32275	VOLKSWAGEN	TRANSPORTER T5 Pritsche/Fahrgestell (7JD, 7JE, 7JL, 7JY, 7JZ	2.0 BiTDI 4motion	09.2009		132	180	1968	4	CFCA	From Chassis No.:	7H-A-200 001; 7J-A-200 001
A2C59515370	Luftregelventil / Air Control Valve	32275	VOLKSWAGEN	TRANSPORTER T5 Pritsche/Fahrgestell (7JD, 7JE, 7JL, 7JY, 7JZ	2.0 BiTDI 4motion	09.2009		132	180	1968	4	CFCA	From Chassis No.:	7H-A-200 001; 7J-A-200 001
A2C59515370	Luftregelventil / Air Control Valve	32275	VOLKSWAGEN	TRANSPORTER T5 Pritsche/Fahrgestell (7JD, 7JE, 7JL, 7JY, 7JZ	2.0 BiTDI 4motion	09.2009		132	180	1968	4	CFCA	From Chassis No.:	7H-A-200 001; 7J-A-200 001
A2C59515370	Luftregelventil / Air Control Valve	24388	VOLKSWAGEN	TRANSPORTER T5 Pritsche/Fahrgestell (7JD, 7JE, 7JL, 7JY, 7JZ	2.0 TDI	05.2011		84	114	1968	4	CAAD	From Chassis No.:	7H-C-000 001; 7J-C-000 001
A2C59515370	Luftregelventil / Air Control Valve	24388	VOLKSWAGEN	TRANSPORTER T5 Pritsche/Fahrgestell (7JD, 7JE, 7JL, 7JY, 7JZ	2.0 TDI	05.2011		84	114	1968	4	CAAD	From Chassis No.:	7H-C-000 001; 7J-C-000 001
A2C59515370	Luftregelventil / Air Control Valve	24388	VOLKSWAGEN	TRANSPORTER T5 Pritsche/Fahrgestell (7JD, 7JE, 7JL, 7JY, 7JZ	2.0 TDI	05.2011		84	114	1968	4	CAAD	From Chassis No.:	7H-C-000 001; 7J-C-000 001
A2C59515370	Luftregelventil / Air Control Valve	24388	VOLKSWAGEN	TRANSPORTER T5 Pritsche/Fahrgestell (7JD, 7JE, 7JL, 7JY, 7JZ	2.0 TDI	05.2011		84	114	1968	4	CAAD	From Chassis No.:	7H-C-000 001; 7J-C-000 001
A2C59515370	Luftregelventil / Air Control Valve	24388	VOLKSWAGEN	TRANSPORTER T5 Pritsche/Fahrgestell (7JD, 7JE, 7JL, 7JY, 7JZ	2.0 TDI	05.2011		84	114	1968	4	CAAD	From Chassis No.:	7H-C-000 001; 7J-C-000 001
A2C59515370	Luftregelventil / Air Control Valve	24388	VOLKSWAGEN	TRANSPORTER T5 Pritsche/Fahrgestell (7JD, 7JE, 7JL, 7JY, 7JZ	2.0 TDI	05.2011		84	114	1968	4	CAAD	From Chassis No.:	7H-C-000 001; 7J-C-000 001
A2C59515370	Luftregelventil / Air Control Valve	24388	VOLKSWAGEN	TRANSPORTER T5 Pritsche/Fahrgestell (7JD, 7JE, 7JL, 7JY, 7JZ	2.0 TDI	05.2011		84	114	1968	4	CAAD	From Chassis No.:	7H-C-000 001; 7J-C-000 001
A2C59515370	Luftregelventil / Air Control Valve	27824	VOLKSWAGEN	TRANSPORTER T5 Pritsche/Fahrgestell (7JD, 7JE, 7JL, 7JY, 7JZ	2.0 TDI	05.2010		100	136	1968	4	CAAE	From Chassis No.:	7H-A-200 001; 7J-A-200 001
A2C59515370	Luftregelventil / Air Control Valve	27824	VOLKSWAGEN	TRANSPORTER T5 Pritsche/Fahrgestell (7JD, 7JE, 7JL, 7JY, 7JZ	2.0 TDI	05.2010		100	136	1968	4	CAAE	From Chassis No.:	7H-A-200 001; 7J-A-200 001
A2C59515370	Luftregelventil / Air Control Valve	27824	VOLKSWAGEN	TRANSPORTER T5 Pritsche/Fahrgestell (7JD, 7JE, 7JL, 7JY, 7JZ	2.0 TDI	05.2010		100	136	1968	4	CAAE	From Chassis No.:	7H-A-200 001; 7J-A-200 001
A2C59515370	Luftregelventil / Air Control Valve	27824	VOLKSWAGEN	TRANSPORTER T5 Pritsche/Fahrgestell (7JD, 7JE, 7JL, 7JY, 7JZ	2.0 TDI	05.2010		100	136	1968	4	CAAE	From Chassis No.:	7H-A-200 001; 7J-A-200 001
A2C59515370	Luftregelventil / Air Control Valve	27824	VOLKSWAGEN	TRANSPORTER T5 Pritsche/Fahrgestell (7JD, 7JE, 7JL, 7JY, 7JZ	2.0 TDI	05.2010		100	136	1968	4	CAAE	From Chassis No.:	7H-A-200 001; 7J-A-200 001
A2C59515370	Luftregelventil / Air Control Valve	27824	VOLKSWAGEN	TRANSPORTER T5 Pritsche/Fahrgestell (7JD, 7JE, 7JL, 7JY, 7JZ	2.0 TDI	05.2010		100	136	1968	4	CAAE	From Chassis No.:	7H-A-200 001; 7J-A-200 001
A2C59515370	Luftregelventil / Air Control Valve	27824	VOLKSWAGEN	TRANSPORTER T5 Pritsche/Fahrgestell (7JD, 7JE, 7JL, 7JY, 7JZ	2.0 TDI	05.2010		100	136	1968	4	CAAE	From Chassis No.:	7H-A-200 001; 7J-A-200 001
A2C59515370	Luftregelventil / Air Control Valve	27824	VOLKSWAGEN	TRANSPORTER T5 Pritsche/Fahrgestell (7JD, 7JE, 7JL, 7JY, 7JZ	2.0 TDI	05.2010		100	136	1968	4	CAAE	From Chassis No.:	7H-A-200 001; 7J-A-200 001
A2C59515370	Luftregelventil / Air Control Valve	32257	VOLKSWAGEN	TRANSPORTER T5 Pritsche/Fahrgestell (7JD, 7JE, 7JL, 7JY, 7JZ	2.0 TDI	09.2009		62	84	1968	4	CAAA	From Chassis No.:	7H-A-200 001; 7J-A-200 001
A2C59515370	Luftregelventil / Air Control Valve	32257	VOLKSWAGEN	TRANSPORTER T5 Pritsche/Fahrgestell (7JD, 7JE, 7JL, 7JY, 7JZ	2.0 TDI	09.2009		62	84	1968	4	CAAA	From Chassis No.:	7H-A-200 001; 7J-A-200 001
A2C59515370	Luftregelventil / Air Control Valve	32257	VOLKSWAGEN	TRANSPORTER T5 Pritsche/Fahrgestell (7JD, 7JE, 7JL, 7JY, 7JZ	2.0 TDI	09.2009		62	84	1968	4	CAAA	From Chassis No.:	7H-A-200 001; 7J-A-200 001
A2C59515370	Luftregelventil / Air Control Valve	32257	VOLKSWAGEN	TRANSPORTER T5 Pritsche/Fahrgestell (7JD, 7JE, 7JL, 7JY, 7JZ	2.0 TDI	09.2009		62	84	1968	4	CAAA	From Chassis No.:	7H-A-200 001; 7J-A-200 001
A2C59515370	Luftregelventil / Air Control Valve	32257	VOLKSWAGEN	TRANSPORTER T5 Pritsche/Fahrgestell (7JD, 7JE, 7JL, 7JY, 7JZ	2.0 TDI	09.2009		62	84	1968	4	CAAA	From Chassis No.:	7H-A-200 001; 7J-A-200 001
A2C59515370	Luftregelventil / Air Control Valve	32257	VOLKSWAGEN	TRANSPORTER T5 Pritsche/Fahrgestell (7JD, 7JE, 7JL, 7JY, 7JZ	2.0 TDI	09.2009		62	84	1968	4	CAAA	From Chassis No.:	7H-A-200 001; 7J-A-200 001
A2C59515370	Luftregelventil / Air Control Valve	32257	VOLKSWAGEN	TRANSPORTER T5 Pritsche/Fahrgestell (7JD, 7JE, 7JL, 7JY, 7JZ	2.0 TDI	09.2009		62	84	1968	4	CAAA	From Chassis No.:	7H-A-200 001; 7J-A-200 001
A2C59515370	Luftregelventil / Air Control Valve	32257	VOLKSWAGEN	TRANSPORTER T5 Pritsche/Fahrgestell (7JD, 7JE, 7JL, 7JY, 7JZ	2.0 TDI	09.2009		62	84	1968	4	CAAA	From Chassis No.:	7H-A-200 001; 7J-A-200 001
A2C59515370	Luftregelventil / Air Control Valve	32258	VOLKSWAGEN	TRANSPORTER T5 Pritsche/Fahrgestell (7JD, 7JE, 7JL, 7JY, 7JZ	2.0 TDI	09.2009		75	102	1968	4	CAAB	From Chassis No.:	7H-A-200 001; 7J-A-200 001
A2C59515370	Luftregelventil / Air Control Valve	32258	VOLKSWAGEN	TRANSPORTER T5 Pritsche/Fahrgestell (7JD, 7JE, 7JL, 7JY, 7JZ	2.0 TDI	09.2009		75	102	1968	4	CAAB	From Chassis No.:	7H-A-200 001; 7J-A-200 001
A2C59515370	Luftregelventil / Air Control Valve	32258	VOLKSWAGEN	TRANSPORTER T5 Pritsche/Fahrgestell (7JD, 7JE, 7JL, 7JY, 7JZ	2.0 TDI	09.2009		75	102	1968	4	CAAB	From Chassis No.:	7H-A-200 001; 7J-A-200 001
A2C59515370	Luftregelventil / Air Control Valve	32258	VOLKSWAGEN	TRANSPORTER T5 Pritsche/Fahrgestell (7JD, 7JE, 7JL, 7JY, 7JZ	2.0 TDI	09.2009		75	102	1968	4	CAAB	From Chassis No.:	7H-A-200 001; 7J-A-200 001
A2C59515370	Luftregelventil / Air Control Valve	32258	VOLKSWAGEN	TRANSPORTER T5 Pritsche/Fahrgestell (7JD, 7JE, 7JL, 7JY, 7JZ	2.0 TDI	09.2009		75	102	1968	4	CAAB	From Chassis No.:	7H-A-200 001; 7J-A-200 001
A2C59515370	Luftregelventil / Air Control Valve	32258	VOLKSWAGEN	TRANSPORTER T5 Pritsche/Fahrgestell (7JD, 7JE, 7JL, 7JY, 7JZ	2.0 TDI	09.2009		75	102	1968	4	CAAB	From Chassis No.:	7H-A-200 001; 7J-A-200 001
A2C59515370	Luftregelventil / Air Control Valve	32258	VOLKSWAGEN	TRANSPORTER T5 Pritsche/Fahrgestell (7JD, 7JE, 7JL, 7JY, 7JZ	2.0 TDI	09.2009		75	102	1968	4	CAAB	From Chassis No.:	7H-A-200 001; 7J-A-200 001
A2C59515370	Luftregelventil / Air Control Valve	32263	VOLKSWAGEN	TRANSPORTER T5 Pritsche/Fahrgestell (7JD, 7JE, 7JL, 7JY, 7JZ	2.0 TDI	09.2009		103	140	1968	4	CAAC	From Chassis No.:	7H-A-200 001; 7J-A-200 001
A2C59515370	Luftregelventil / Air Control Valve	32263	VOLKSWAGEN	TRANSPORTER T5 Pritsche/Fahrgestell (7JD, 7JE, 7JL, 7JY, 7JZ	2.0 TDI	09.2009		103	140	1968	4	CAAC	From Chassis No.:	7H-A-200 001; 7J-A-200 001
A2C59515370	Luftregelventil / Air Control Valve	32263	VOLKSWAGEN	TRANSPORTER T5 Pritsche/Fahrgestell (7JD, 7JE, 7JL, 7JY, 7JZ	2.0 TDI	09.2009		103	140	1968	4	CAAC	From Chassis No.:	7H-A-200 001; 7J-A-200 001
A2C59515370	Luftregelventil / Air Control Valve	32263	VOLKSWAGEN	TRANSPORTER T5 Pritsche/Fahrgestell (7JD, 7JE, 7JL, 7JY, 7JZ	2.0 TDI	09.2009		103	140	1968	4	CAAC	From Chassis No.:	7H-A-200 001; 7J-A-200 001

Anhang Applikationen / Addendum Applications

VDO Nr.	Bezeichnung	TecDoc - KtypNr.	Hersteller	Model	Typ	Von Jahr	Bis Jahr	kw	ps	L	Zyl.	Motorcode	Einschränkung1	Einschränkung1 - Wert
VDO No.	Name	TecDoc - Ktypeno.	Manufacturer	Model	Type	Year from	Year to	kw	ps	L	Cyl.	Motorcode	Restriction1	Restriction1 - Value
A2C59515370	Luftregelventil / Air Control Valve	32263	VOLKSWAGEN	TRANSPORTER T5 Pritsche/Fahrgestell (7JD, 7JE, 7JL, 7JY, 7JZ	2.0 TDI	09.2009		103	140	1968	4	CAAC	From Chassis No.:	7H-A-200 001; 7J-A-200 001
A2C59515370	Luftregelventil / Air Control Valve	32263	VOLKSWAGEN	TRANSPORTER T5 Pritsche/Fahrgestell (7JD, 7JE, 7JL, 7JY, 7JZ	2.0 TDI	09.2009		103	140	1968	4	CAAC	From Chassis No.:	7H-A-200 001; 7J-A-200 001
A2C59515370	Luftregelventil / Air Control Valve	28039	VOLKSWAGEN	TRANSPORTER T5 Pritsche/Fahrgestell (7JD, 7JE, 7JL, 7JY, 7JZ	2.0 TDI 4motion	05.2010		100	136	1968	4	CAAE	From Chassis No.:	7H-A-200 001; 7J-A-200 001
A2C59515370	Luftregelventil / Air Control Valve	28039	VOLKSWAGEN	TRANSPORTER T5 Pritsche/Fahrgestell (7JD, 7JE, 7JL, 7JY, 7JZ	2.0 TDI 4motion	05.2010		100	136	1968	4	CCHB	From Chassis No.:	7H-A-200 001; 7J-A-200 001
A2C59515370	Luftregelventil / Air Control Valve	28039	VOLKSWAGEN	TRANSPORTER T5 Pritsche/Fahrgestell (7JD, 7JE, 7JL, 7JY, 7JZ	2.0 TDI 4motion	05.2010		100	136	1968	4	CAAE	From Chassis No.:	7H-A-200 001; 7J-A-200 001
A2C59515370	Luftregelventil / Air Control Valve	28039	VOLKSWAGEN	TRANSPORTER T5 Pritsche/Fahrgestell (7JD, 7JE, 7JL, 7JY, 7JZ	2.0 TDI 4motion	05.2010		100	136	1968	4	CCHB	From Chassis No.:	7H-A-200 001; 7J-A-200 001
A2C59515370	Luftregelventil / Air Control Valve	28039	VOLKSWAGEN	TRANSPORTER T5 Pritsche/Fahrgestell (7JD, 7JE, 7JL, 7JY, 7JZ	2.0 TDI 4motion	05.2010		100	136	1968	4	CAAE	From Chassis No.:	7H-A-200 001; 7J-A-200 001
A2C59515370	Luftregelventil / Air Control Valve	28039	VOLKSWAGEN	TRANSPORTER T5 Pritsche/Fahrgestell (7JD, 7JE, 7JL, 7JY, 7JZ	2.0 TDI 4motion	05.2010		100	136	1968	4	CCHB	From Chassis No.:	7H-A-200 001; 7J-A-200 001
A2C59515370	Luftregelventil / Air Control Valve	28039	VOLKSWAGEN	TRANSPORTER T5 Pritsche/Fahrgestell (7JD, 7JE, 7JL, 7JY, 7JZ	2.0 TDI 4motion	05.2010		100	136	1968	4	CAAE	From Chassis No.:	7H-A-200 001; 7J-A-200 001
A2C59515370	Luftregelventil / Air Control Valve	28039	VOLKSWAGEN	TRANSPORTER T5 Pritsche/Fahrgestell (7JD, 7JE, 7JL, 7JY, 7JZ	2.0 TDI 4motion	05.2010		100	136	1968	4	CCHB	From Chassis No.:	7H-A-200 001; 7J-A-200 001
A2C59515370	Luftregelventil / Air Control Valve	28039	VOLKSWAGEN	TRANSPORTER T5 Pritsche/Fahrgestell (7JD, 7JE, 7JL, 7JY, 7JZ	2.0 TDI 4motion	05.2010		100	136	1968	4	CAAE	From Chassis No.:	7H-A-200 001; 7J-A-200 001
A2C59515370	Luftregelventil / Air Control Valve	28039	VOLKSWAGEN	TRANSPORTER T5 Pritsche/Fahrgestell (7JD, 7JE, 7JL, 7JY, 7JZ	2.0 TDI 4motion	05.2010		100	136	1968	4	CCHB	From Chassis No.:	7H-A-200 001; 7J-A-200 001
A2C59515370	Luftregelventil / Air Control Valve	28039	VOLKSWAGEN	TRANSPORTER T5 Pritsche/Fahrgestell (7JD, 7JE, 7JL, 7JY, 7JZ	2.0 TDI 4motion	05.2010		100	136	1968	4	CAAE	From Chassis No.:	7H-A-200 001; 7J-A-200 001
A2C59515370	Luftregelventil / Air Control Valve	28039	VOLKSWAGEN	TRANSPORTER T5 Pritsche/Fahrgestell (7JD, 7JE, 7JL, 7JY, 7JZ	2.0 TDI 4motion	05.2010		100	136	1968	4	CCHB	From Chassis No.:	7H-A-200 001; 7J-A-200 001
A2C59515370	Luftregelventil / Air Control Valve	28039	VOLKSWAGEN	TRANSPORTER T5 Pritsche/Fahrgestell (7JD, 7JE, 7JL, 7JY, 7JZ	2.0 TDI 4motion	05.2010		100	136	1968	4	CAAE	From Chassis No.:	7H-A-200 001; 7J-A-200 001
A2C59515370	Luftregelventil / Air Control Valve	28039	VOLKSWAGEN	TRANSPORTER T5 Pritsche/Fahrgestell (7JD, 7JE, 7JL, 7JY, 7JZ	2.0 TDI 4motion	05.2010		100	136	1968	4	CCHB	From Chassis No.:	7H-A-200 001; 7J-A-200 001
A2C59515370	Luftregelventil / Air Control Valve	28039	VOLKSWAGEN	TRANSPORTER T5 Pritsche/Fahrgestell (7JD, 7JE, 7JL, 7JY, 7JZ	2.0 TDI 4motion	05.2010		100	136	1968	4	CAAE	From Chassis No.:	7H-A-200 001; 7J-A-200 001
A2C59515370	Luftregelventil / Air Control Valve	28039	VOLKSWAGEN	TRANSPORTER T5 Pritsche/Fahrgestell (7JD, 7JE, 7JL, 7JY, 7JZ	2.0 TDI 4motion	05.2010		100	136	1968	4	CCHB	From Chassis No.:	7H-A-200 001; 7J-A-200 001
A2C59515370	Luftregelventil / Air Control Valve	32268	VOLKSWAGEN	TRANSPORTER T5 Pritsche/Fahrgestell (7JD, 7JE, 7JL, 7JY, 7JZ	2.0 TDI 4motion	09.2009		103	140	1968	4	CAAC	From Chassis No.:	7H-A-200 001; 7J-A-200 001
A2C59515370	Luftregelventil / Air Control Valve	32268	VOLKSWAGEN	TRANSPORTER T5 Pritsche/Fahrgestell (7JD, 7JE, 7JL, 7JY, 7JZ	2.0 TDI 4motion	09.2009		103	140	1968	4	CAAC	From Chassis No.:	7H-A-200 001; 7J-A-200 001
A2C59515370	Luftregelventil / Air Control Valve	32268	VOLKSWAGEN	TRANSPORTER T5 Pritsche/Fahrgestell (7JD, 7JE, 7JL, 7JY, 7JZ	2.0 TDI 4motion	09.2009		103	140	1968	4	CAAC	From Chassis No.:	7H-A-200 001; 7J-A-200 001
A2C59515370	Luftregelventil / Air Control Valve	32268	VOLKSWAGEN	TRANSPORTER T5 Pritsche/Fahrgestell (7JD, 7JE, 7JL, 7JY, 7JZ	2.0 TDI 4motion	09.2009		103	140	1968	4	CAAC	From Chassis No.:	7H-A-200 001; 7J-A-200 001
A2C59515370	Luftregelventil / Air Control Valve	32268	VOLKSWAGEN	TRANSPORTER T5 Pritsche/Fahrgestell (7JD, 7JE, 7JL, 7JY, 7JZ	2.0 TDI 4motion	09.2009		103	140	1968	4	CAAC	From Chassis No.:	7H-A-200 001; 7J-A-200 001
A2C59515370	Luftregelventil / Air Control Valve	32268	VOLKSWAGEN	TRANSPORTER T5 Pritsche/Fahrgestell (7JD, 7JE, 7JL, 7JY, 7JZ	2.0 TDI 4motion	09.2009		103	140	1968	4	CAAC	From Chassis No.:	7H-A-200 001; 7J-A-200 001
A2C59515370	Luftregelventil / Air Control Valve	32268	VOLKSWAGEN	TRANSPORTER T5 Pritsche/Fahrgestell (7JD, 7JE, 7JL, 7JY, 7JZ	2.0 TDI 4motion	09.2009		103	140	1968	4	CAAC	From Chassis No.:	7H-A-200 001; 7J-A-200 001
A2C59515371	Luftregelventil / Air Control Valve	24179	VOLKSWAGEN	BEETLE (5C1)	2.0 TDI	04.2012		103	140	1968	4	CJAA		
A2C59515371	Luftregelventil / Air Control Valve	24179	VOLKSWAGEN	BEETLE (5C1)	2.0 TDI	04.2012		103	140	1968	4	CJAA		
A2C59515371	Luftregelventil / Air Control Valve	24179	VOLKSWAGEN	BEETLE (5C1)	2.0 TDI	04.2012		103	140	1968	4	CJAA		
A2C59515371	Luftregelventil / Air Control Valve	24179	VOLKSWAGEN	BEETLE (5C1)	2.0 TDI	04.2012		103	140	1968	4	CJAA		
A2C59515371	Luftregelventil / Air Control Valve	24179	VOLKSWAGEN	BEETLE (5C1)	2.0 TDI	04.2012		103	140	1968	4	CJAA		
A2C59515371	Luftregelventil / Air Control Valve	24179	VOLKSWAGEN	BEETLE (5C1)	2.0 TDI	04.2012		103	140	1968	4	CJAA		
A2C59515371	Luftregelventil / Air Control Valve	24179	VOLKSWAGEN	BEETLE (5C1)	2.0 TDI	04.2012		103	140	1968	4	CJAA		
A2C59515371	Luftregelventil / Air Control Valve	24179	VOLKSWAGEN	BEETLE (5C1)	2.0 TDI	04.2012		103	140	1968	4	CJAA		
A2C59515371	Luftregelventil / Air Control Valve	24179	VOLKSWAGEN	BEETLE (5C1)	2.0 TDI	04.2012		103	140	1968	4	CJAA		
A2C59515371	Luftregelventil / Air Control Valve	29994	VOLKSWAGEN	GOLF VI (5K1)	2.0 TDI	10.2008		103	140	1968	4	CJAA		
A2C59515371	Luftregelventil / Air Control Valve	29994	VOLKSWAGEN	GOLF VI (5K1)	2.0 TDI	10.2008		103	140	1968	4	CJAA		
A2C59515371	Luftregelventil / Air Control Valve	29994	VOLKSWAGEN	GOLF VI (5K1)	2.0 TDI	10.2008		103	140	1968	4	CJAA		
A2C59515371	Luftregelventil / Air Control Valve	29994	VOLKSWAGEN	GOLF VI (5K1)	2.0 TDI	10.2008		103	140	1968	4	CJAA		
A2C59515371	Luftregelventil / Air Control Valve	29994	VOLKSWAGEN	GOLF VI (5K1)	2.0 TDI	10.2008		103	140	1968	4	CJAA		
A2C59515371	Luftregelventil / Air Control Valve	29994	VOLKSWAGEN	GOLF VI (5K1)	2.0 TDI	10.2008		103	140	1968	4	CJAA		
A2C59515371	Luftregelventil / Air Control Valve	5946	VOLKSWAGEN	JETTA IV (162)	2.0 TDI	02.2011		103	140	1968	4	CJAA		
A2C59515371	Luftregelventil / Air Control Valve	5946	VOLKSWAGEN	JETTA IV (162)	2.0 TDI	02.2011		103	140	1968	4	CJAA		
A2C59515371	Luftregelventil / Air Control Valve	5946	VOLKSWAGEN	JETTA IV (162)	2.0 TDI	02.2011		103	140	1968	4	CJAA		
A2C59515371	Luftregelventil / Air Control Valve	5946	VOLKSWAGEN	JETTA IV (162)	2.0 TDI	02.2011		103	140	1968	4	CJAA		
A2C59515371	Luftregelventil / Air Control Valve	5946	VOLKSWAGEN	JETTA IV (162)	2.0 TDI	02.2011		103	140	1968	4	CJAA		
A2C59515371	Luftregelventil / Air Control Valve	5946	VOLKSWAGEN	JETTA IV (162)	2.0 TDI	02.2011		103	140	1968	4	CJAA		
A2C59515371	Luftregelventil / Air Control Valve	5946	VOLKSWAGEN	JETTA IV (162)	2.0 TDI	02.2011		103	140	1968	4	CJAA		